US007985191B2

(12) **United States Patent**
**Trandafir et al.**

(10) **Patent No.: US 7,985,191 B2**
(45) **Date of Patent: *Jul. 26, 2011**

(54) **APPARATUS AND METHODS FOR THERAPEUTICALLY TREATING DAMAGED TISSUES, BONE FRACTURES, OSTEOPENIA, OR OSTEOPOROSIS**

(75) Inventors: **Titi Trandafir**, Piscataway, NJ (US); **Donald E. Krompasick**, Bethlehem, PA (US)

(73) Assignee: **American Medical Innovations, L.L.C.**, Fort Myers, FL (US)

( * ) Notice: Subject to any disclaimer, the term of this patent is extended or adjusted under 35 U.S.C. 154(b) by 1005 days.

This patent is subject to a terminal disclaimer.

(21) Appl. No.: **11/789,259**

(22) Filed: **Apr. 24, 2007**

(65) **Prior Publication Data**

US 2007/0260161 A1 Nov. 8, 2007

**Related U.S. Application Data**

(63) Continuation of application No. 11/034,302, filed on Jan. 10, 2005, now Pat. No. 7,207,954, which is a continuation of application No. 10/448,942, filed on May 30, 2003, now Pat. No. 6,843,776, which is a continuation-in-part of application No. 10/290,839, filed on Nov. 8, 2002, now Pat. No. 6,884,227.

(51) **Int. Cl.**
***A61H 1/00*** (2006.01)

(52) **U.S. Cl.** ..... **601/90**; 601/23; 601/66; 601/98; 601/100

(58) **Field of Classification Search** ..... 601/1, 23, 601/24, 26–29, 30–35, 66, 86, 90, 97, 98, 601/100, 101, 104–108; 5/607, 609, 611; 177/210 C, 225, 229

See application file for complete search history.

(56) **References Cited**

U.S. PATENT DOCUMENTS

| | | | |
|---|---|---|---|
| 2,779,328 | A | 1/1957 | Grossi |
| 3,134,451 | A | 5/1964 | Hanssen |
| 3,193,034 | A | 7/1965 | Hutchinson et al. |
| 3,304,036 | A | 2/1967 | Davis |
| 3,499,437 | A | 3/1970 | Balamuth |
| 3,760,799 | A | 9/1973 | Crowson |

(Continued)

FOREIGN PATENT DOCUMENTS

| | | | |
|---|---|---|---|
| EP | 0 695 559 | A2 | 2/1996 |

(Continued)

OTHER PUBLICATIONS

Bassett, C. Andrew L. and Robert O. Becker, Generation of Electric Potentials by Bone in Response to Mechanical Stress, Science, Sep. 28, 1962, pp. 1063-1064, 137.

*Primary Examiner* — Quang D Thanh
(74) *Attorney, Agent, or Firm* — Malloy & Malloy, P.A.

(57) **ABSTRACT**

Apparatus and methods for therapeutically treating bone fractures, osteopenia, osteoporosis, or other tissue conditions. A platform supports a body to be treated. An oscillator is positioned within the platform and is configured to impart an oscillating force on the body. A capacitor assembly is positioned adjacent the platform for automatically determining the mass of the body being supported on the platform. Once the mass of the body is determined, an amplitude of the frequency of the oscillating force is adjusted to provide a desired therapeutic treatment to the patient. Also, the capacitor assembly is configured to turn the oscillator on and off as a function of whether or not a body is being supported on the platform.

**17 Claims, 16 Drawing Sheets**

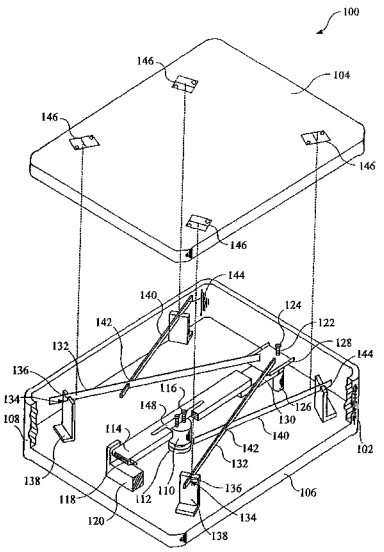

U.S. PATENT DOCUMENTS

| | | | | | |
|---|---|---|---|---|---|
| 3,765,407 | A | | 10/1973 | Prince | |
| 3,767,195 | A | | 10/1973 | Dimick | |
| 3,890,953 | A | | 6/1975 | Kraus et al. | |
| 3,961,380 | A | | 6/1976 | Garr | |
| 4,105,017 | A | | 8/1978 | Ryaby et al. | |
| 4,266,532 | A | | 5/1981 | Ryaby et al. | |
| 4,266,533 | A | | 5/1981 | Ryaby et al. | |
| 4,315,503 | A | | 2/1982 | Ryaby et al. | |
| 4,358,105 | A | | 11/1982 | Sweeney, Jr. | |
| 4,381,040 | A | * | 4/1983 | Brouwer | 177/210 C |
| 4,446,586 | A | | 5/1984 | Reed et al. | |
| 4,452,326 | A | | 6/1984 | Hanssen et al. | |
| 4,530,360 | A | | 7/1985 | Duarte | |
| 4,570,927 | A | | 2/1986 | Petrofsky et al. | |
| 4,669,483 | A | | 6/1987 | Hepp et al. | |
| 4,687,195 | A | | 8/1987 | Potts | |
| 4,710,655 | A | | 12/1987 | Masaki | |
| 4,782,822 | A | | 11/1988 | Ricken | |
| 4,787,888 | A | | 11/1988 | Fox | |
| 4,836,316 | A | | 6/1989 | Carnevale et al. | |
| 4,858,599 | A | * | 8/1989 | Halpern | |
| 4,905,671 | A | * | 3/1990 | Senge et al. | |
| 4,913,248 | A | * | 4/1990 | Zakai | |
| 4,917,376 | A | * | 4/1990 | Lo | |
| 4,928,959 | A | * | 5/1990 | Bassett et al. | |
| 5,000,442 | A | * | 3/1991 | Dalebout et al. | |
| 5,046,484 | A | * | 9/1991 | Bassett et al. | |
| 5,103,806 | A | | 4/1992 | McLeod et al. | |
| 5,108,452 | A | * | 4/1992 | Fallin | |
| 5,133,420 | A | * | 7/1992 | Smith | |
| 5,191,880 | A | | 3/1993 | McLeod et al. | |
| 5,273,028 | A | | 12/1993 | McLeod et al. | |
| 5,295,931 | A | * | 3/1994 | Dreibelbis et al. | |
| 5,318,561 | A | * | 6/1994 | McLeod et al. | |
| 5,339,804 | A | * | 8/1994 | Kemp | |
| 5,351,389 | A | * | 10/1994 | Erickson et al. | |
| 5,368,044 | A | * | 11/1994 | Cain et al. | |
| 5,376,065 | A | | 12/1994 | McLeod et al. | |
| 5,380,269 | A | * | 1/1995 | Urso | |
| 5,409,446 | A | * | 4/1995 | Rattner | |
| RE34,959 | E | * | 5/1995 | Potts | |
| 5,431,612 | A | * | 7/1995 | Holden | |
| 5,466,215 | A | * | 11/1995 | Lair et al. | |
| 5,468,220 | A | | 11/1995 | Sucher | |
| 5,478,306 | A | | 12/1995 | Stoner | |
| 5,484,388 | A | | 1/1996 | Bassett et al. | |
| 5,492,525 | A | | 2/1996 | Gibney | |
| 5,496,256 | A | | 3/1996 | Bock et al. | |
| 5,501,657 | A | | 3/1996 | Feero | |
| 5,520,612 | A | | 5/1996 | Winder et al. | |
| 5,556,372 | A | | 9/1996 | Talish et al. | |
| 5,578,060 | A | | 11/1996 | Pohl et al. | |
| 5,626,554 | A | | 5/1997 | Ryaby et al. | |
| 5,702,353 | A | | 12/1997 | Guzzini et al. | |
| 5,708,236 | A | | 1/1998 | Shaanan et al. | |
| 5,721,400 | A | | 2/1998 | Haraldsson et al. | |
| 5,741,317 | A | | 4/1998 | Ostrow | |
| 5,755,746 | A | | 5/1998 | Lifshey et al. | |
| 5,762,616 | A | | 6/1998 | Talish | |
| 5,779,600 | A | | 7/1998 | Pape | |
| 5,868,649 | A | | 2/1999 | Erickson et al. | |
| 5,871,446 | A | | 2/1999 | Wilk | |
| 5,886,302 | A | | 3/1999 | Germanton et al. | |
| 5,957,814 | A | | 9/1999 | Eschenbach | |
| 5,997,490 | A | | 12/1999 | McLeod et al. | |
| 6,019,710 | A | | 2/2000 | Dalebout et al. | |
| 6,022,349 | A | | 2/2000 | McLeod et al. | |
| 6,061,597 | A | | 5/2000 | Rieman et al. | |
| 6,068,596 | A | | 5/2000 | Weth et al. | |
| 6,080,088 | A | | 6/2000 | Petersen et al. | |
| 6,086,078 | A | | 7/2000 | Ferez | |
| 6,093,135 | A | | 7/2000 | Huang | |
| 6,106,491 | A | | 8/2000 | Gianutsos | |
| 6,179,797 | B1 | | 1/2001 | Brotz | |
| 6,234,975 | B1 | | 5/2001 | McLeod et al. | |
| 6,258,020 | B1 | | 7/2001 | Lopez | |
| 6,620,117 | B1 | | 9/2003 | Johnson et al. | |
| 6,656,137 | B1 | | 12/2003 | Tyldsley et al. | |
| 6,843,776 | B2 | * | 1/2005 | Trandafir et al. | 601/1 |
| 6,884,227 | B2 | | 4/2005 | Krompasick | |
| 7,094,211 | B2 | | 8/2006 | Krompasick | |
| 7,207,955 | B2 | | 4/2007 | Krompasick | |
| 2004/0068211 | A1 | | 4/2004 | Leivseth et al. | |

FOREIGN PATENT DOCUMENTS

| | | |
|---|---|---|
| EP | 1 026 484 A1 | 8/2000 |
| JP | 04-504666 | 8/1992 |
| JP | 07-507224 | 8/1995 |

* cited by examiner

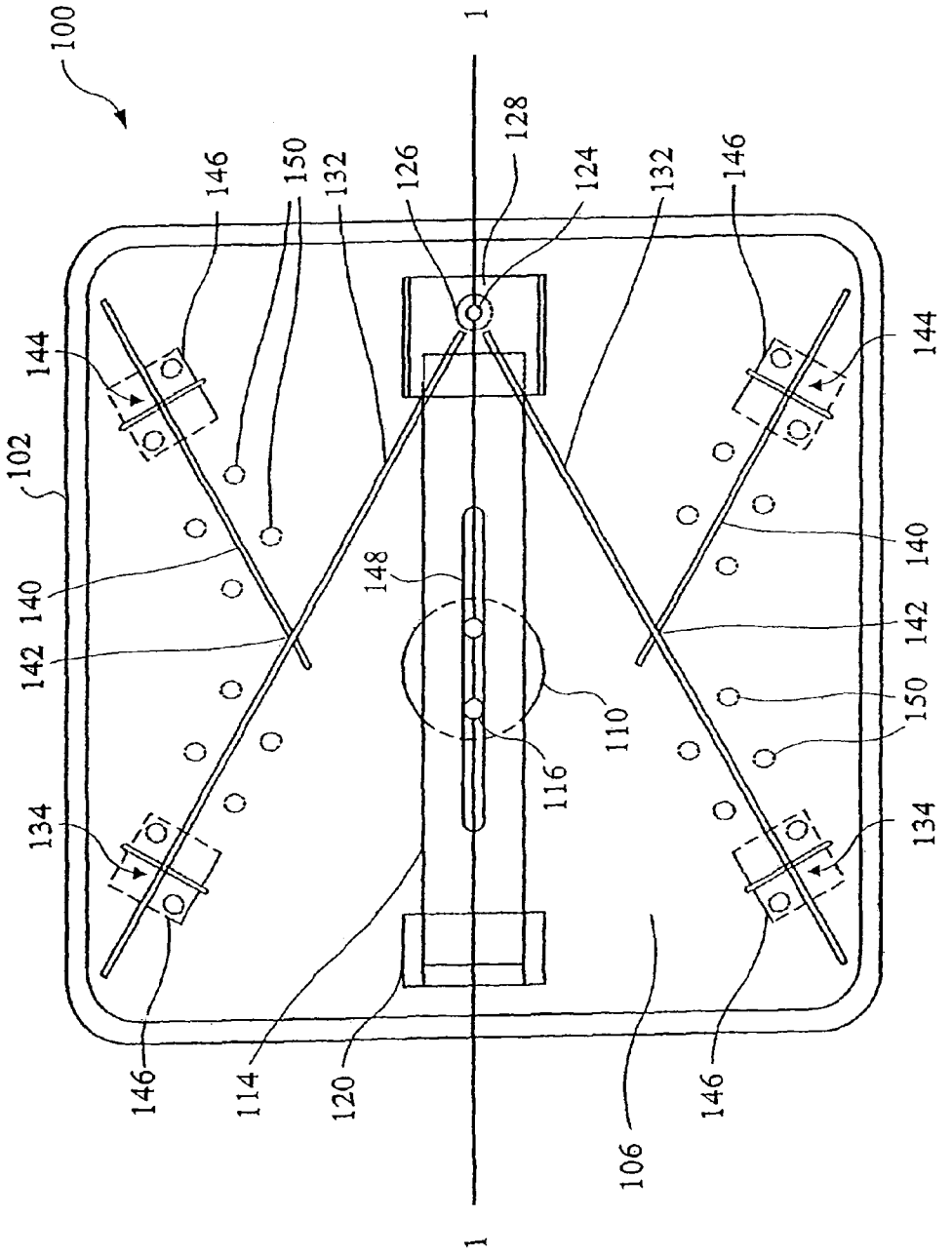
100
1
1
102
106
110
114
116
120
124
126
128
132
132
134
134
140
140
142
142
144
144
146
146
146
146
148
150
150

FIG. 1

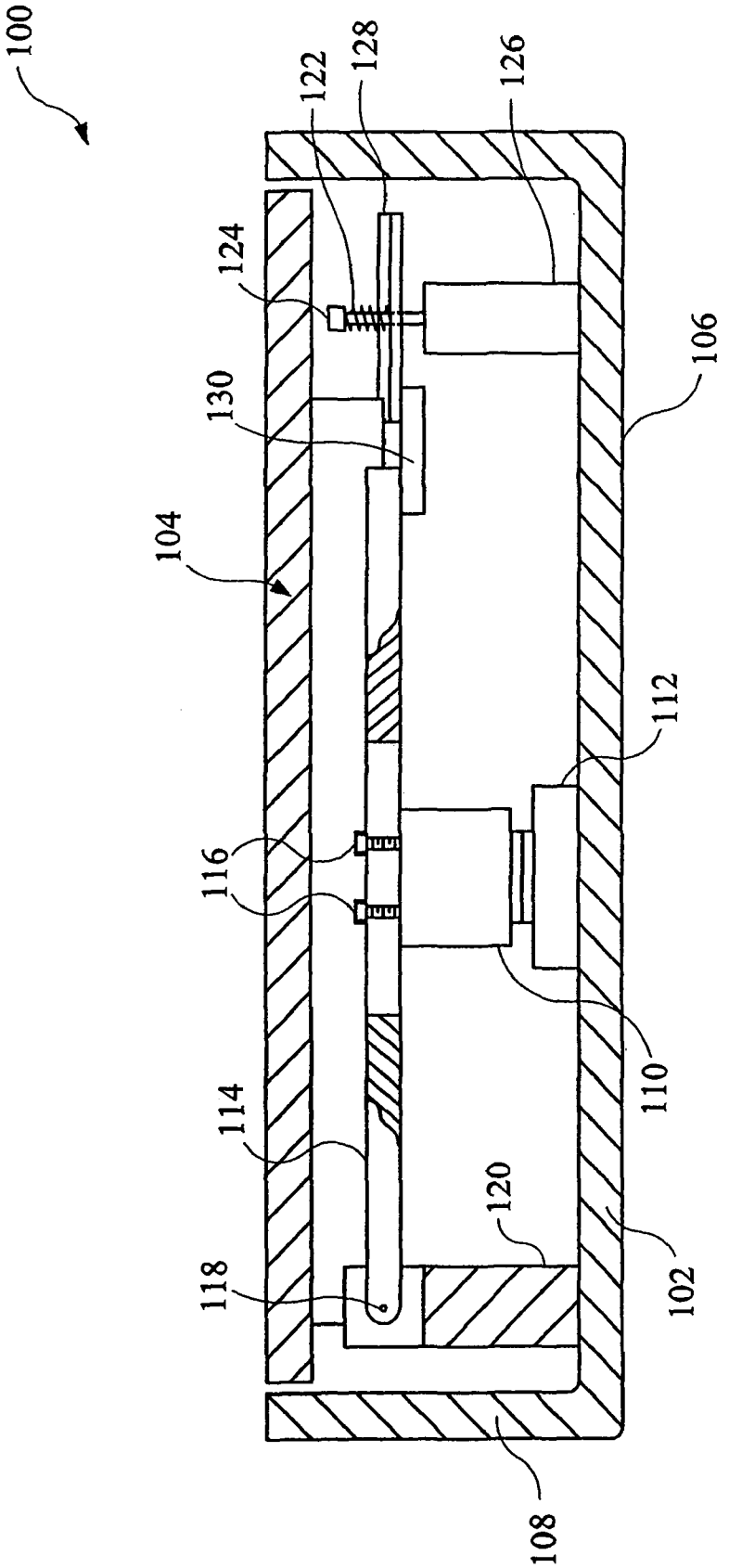


FIG. 2

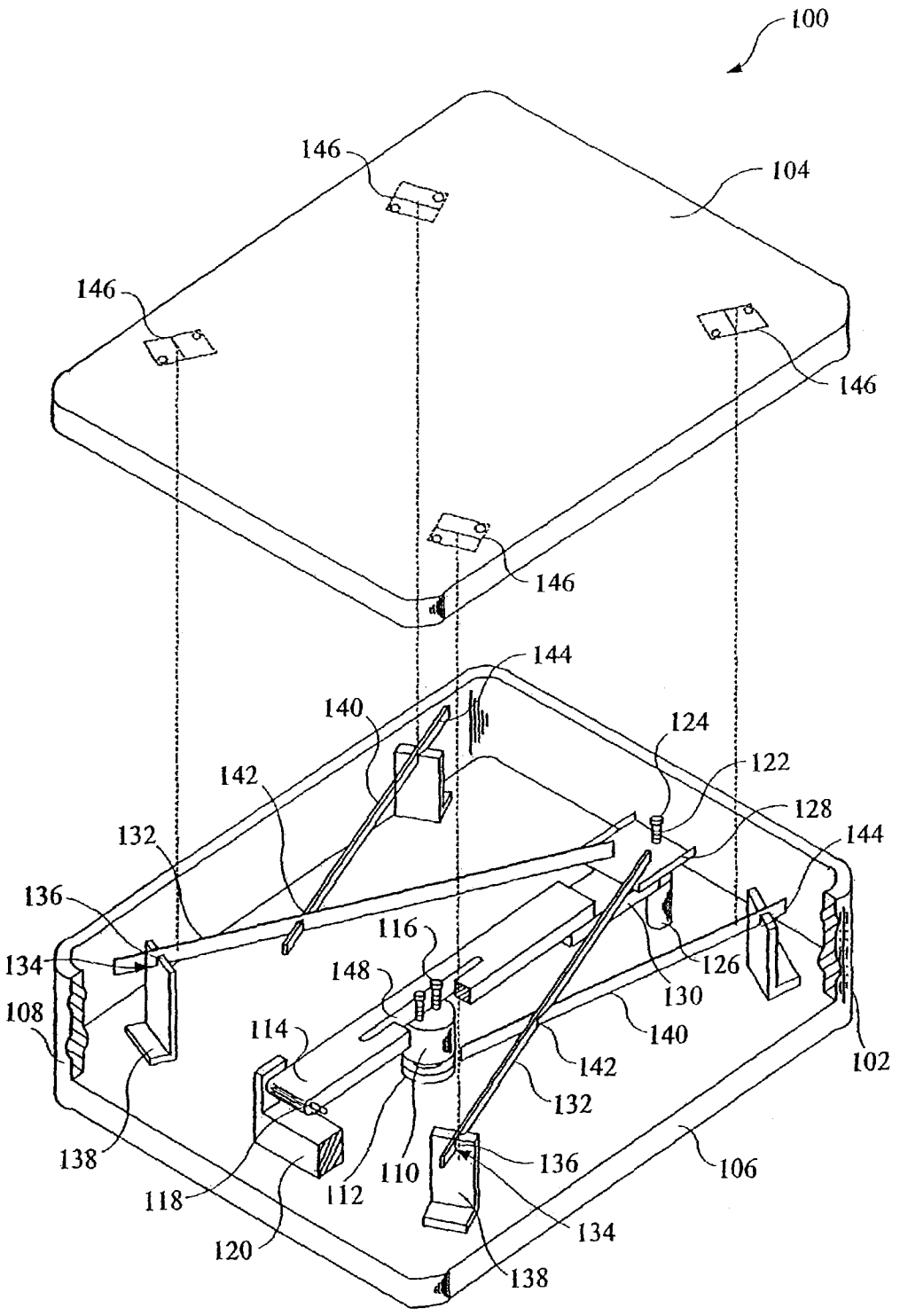
100
146
104
146
146
146
144
140
124
122
142
128
132
144
136
116
134
148
126
130
108
114
140
142
102
132
138
136
106
110
112
118
134
120
138

FIG. 3

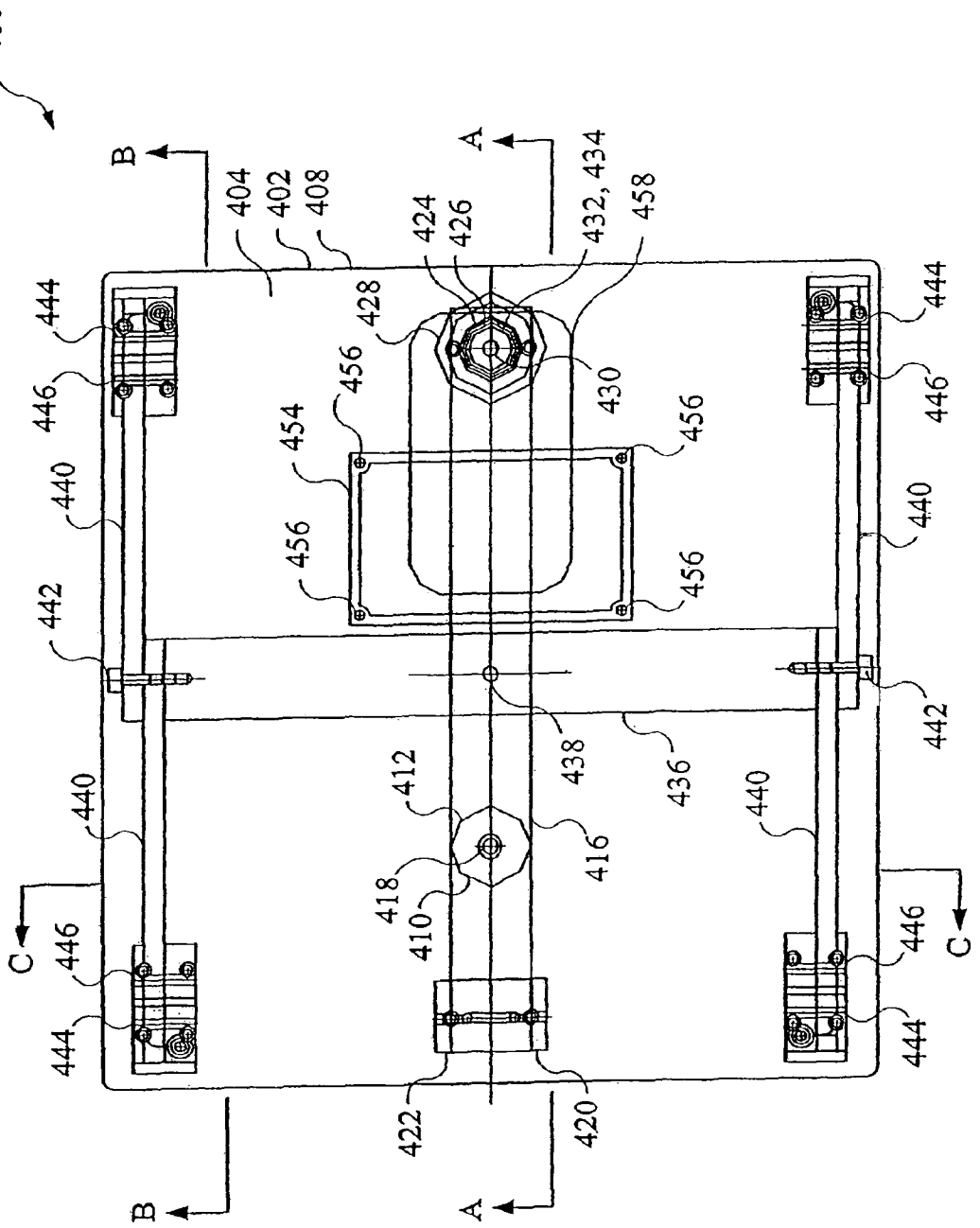
400
B
A
404
402
408
424
426
432, 434
458
428
430
444
446
456
454
440
442
438
436
412
416
418
410
C
422
420

FIG. 4

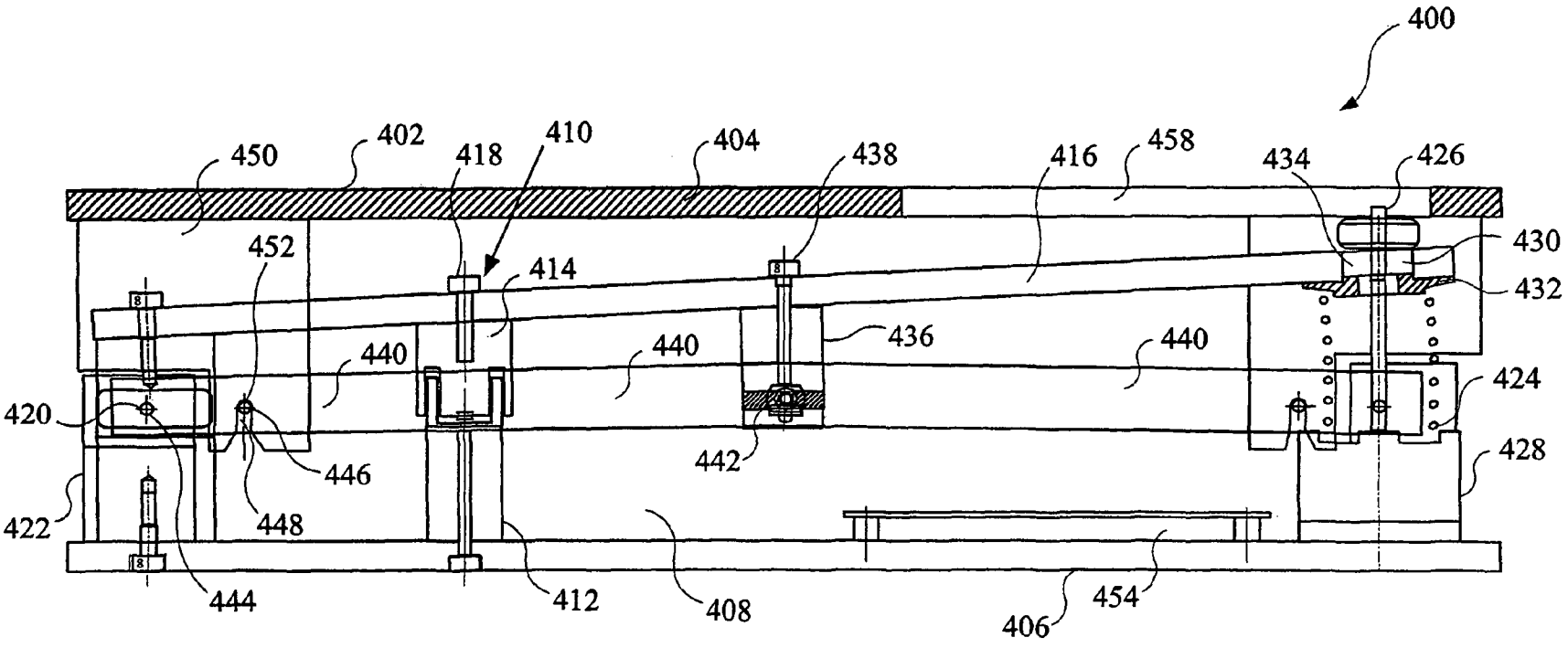
400
450
402
418
410
404
438
416
458
434
426
452
414
430
432
440
440
436
440
424
420
446
442
428
422
448
444
412
408
406
454

FIG. 5

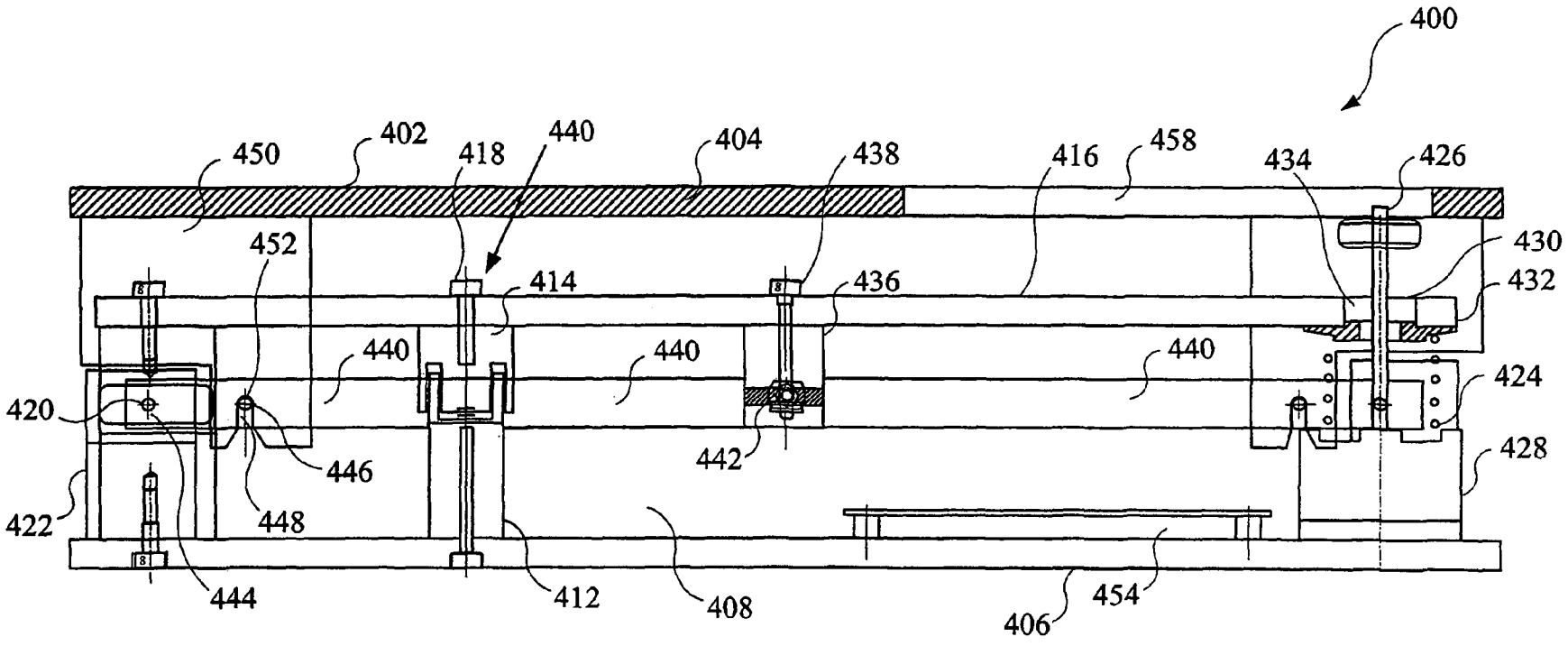
400
450
402
418
440
404
438
416
458
434
426
452
414
436
430
432
440
440
440
424
420
446
442
428
422
448
444
412
408
406
454

FIG. 6

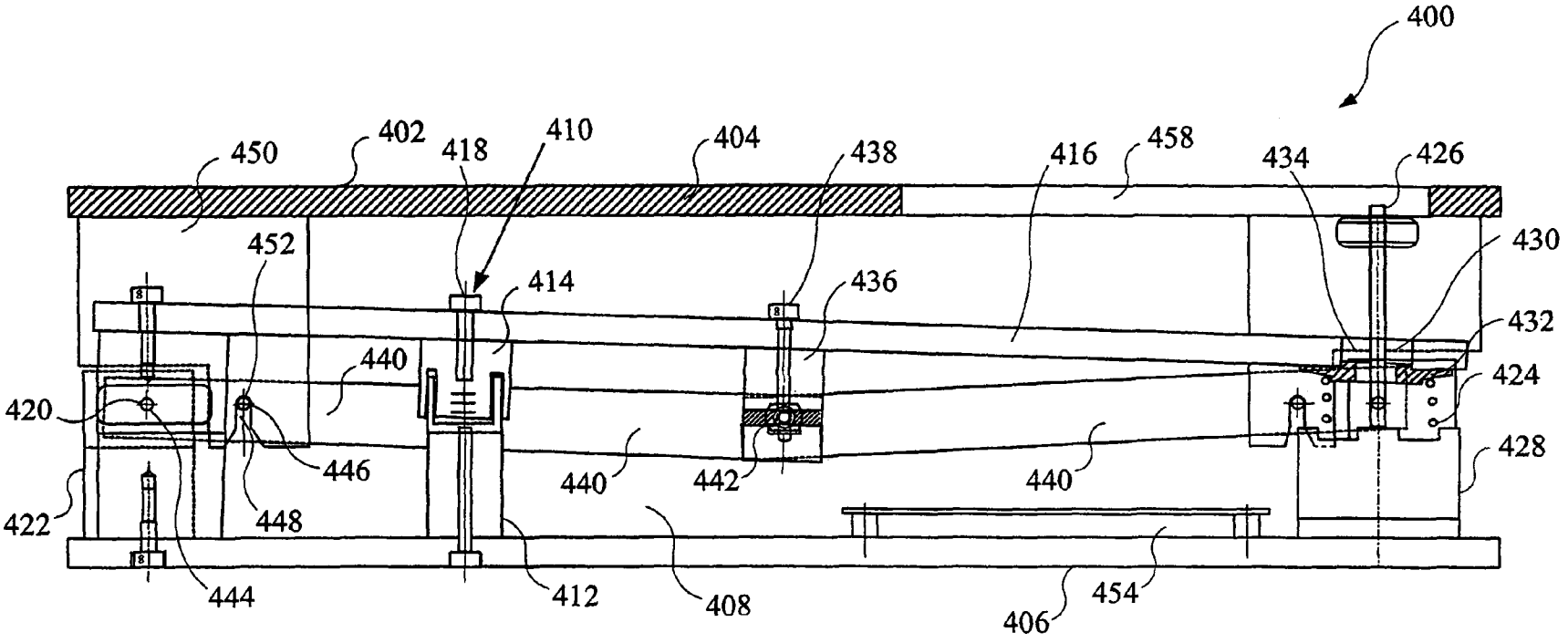
400
450
402
418
410
404
438
416
458
434
426
452
414
436
430
432
440
424
420
446
440
442
440
428
422
448
444
412
408
406
454

FIG. 7

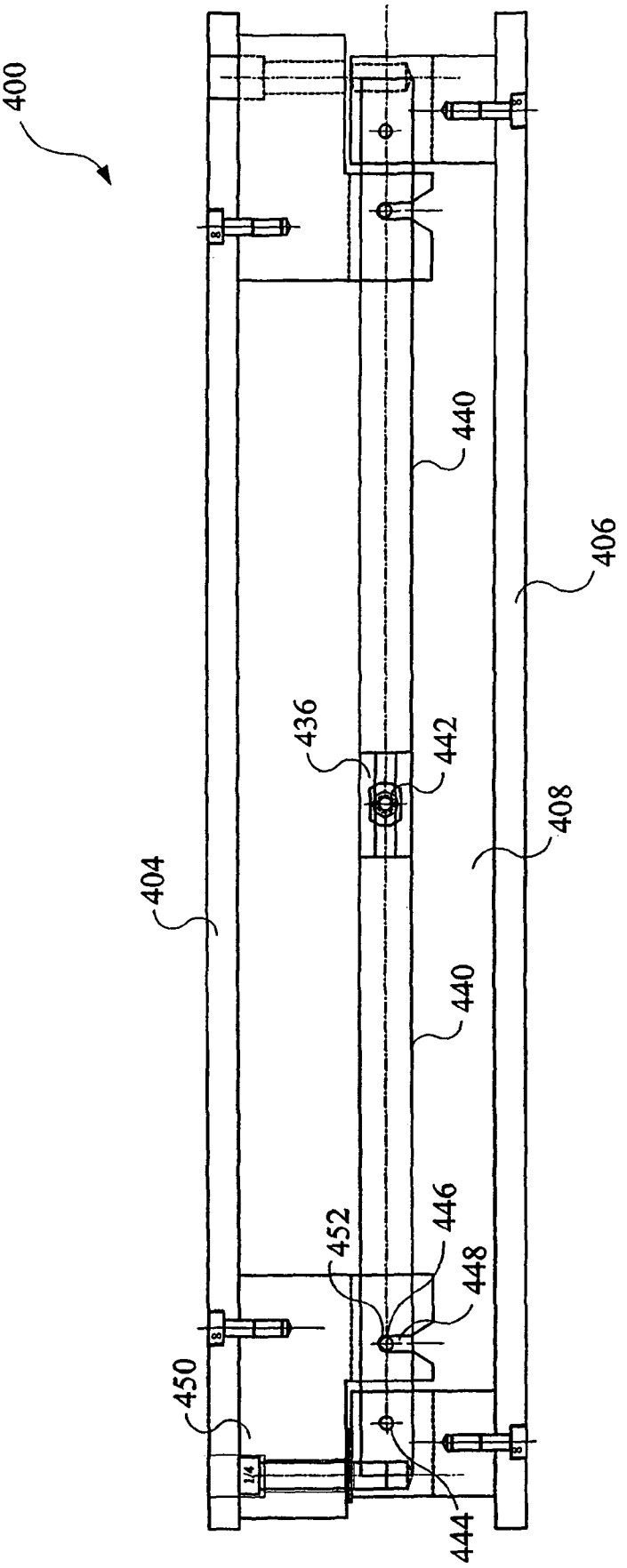


FIG. 8

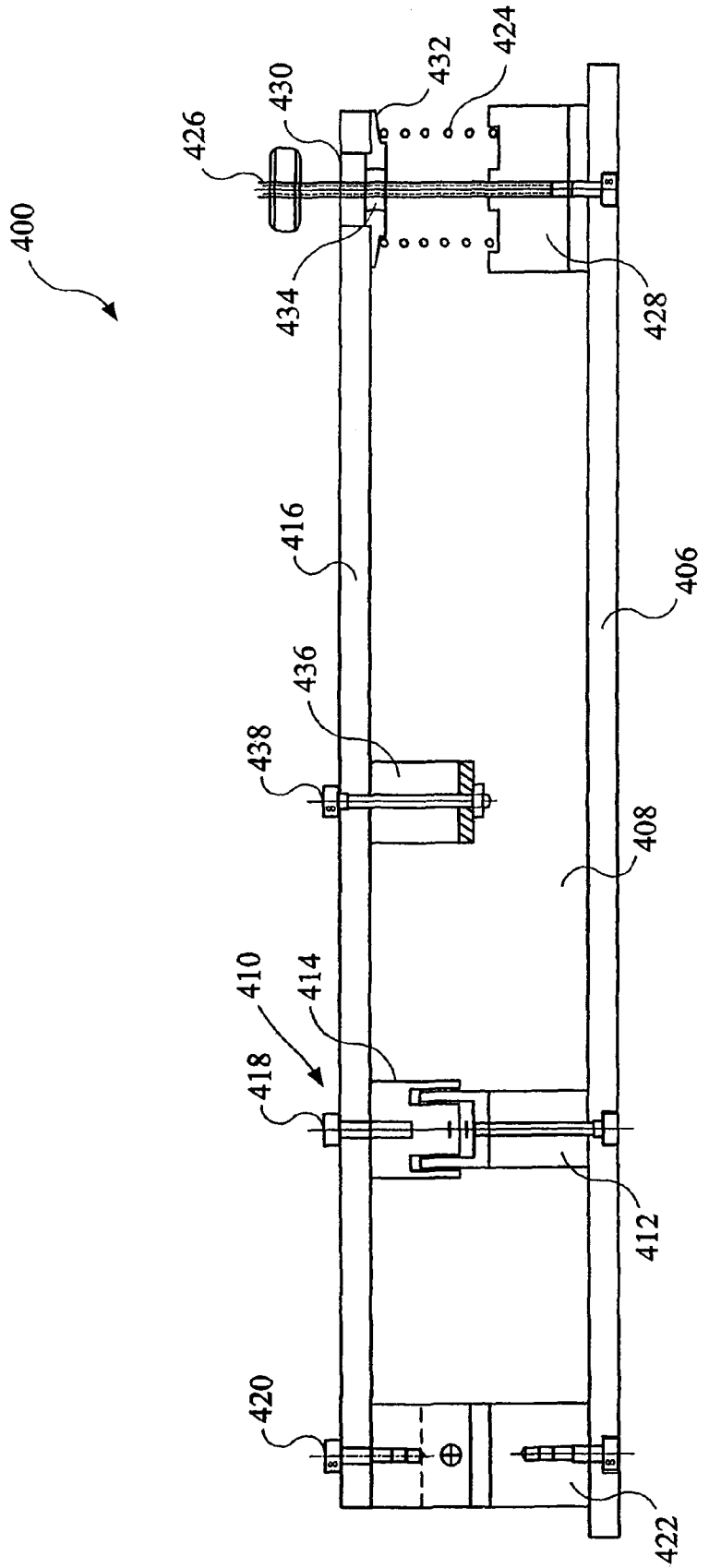
400
426
430
432
424
434
428
416
406
436
438
408
410
414
418
412
420
422

FIG. 9

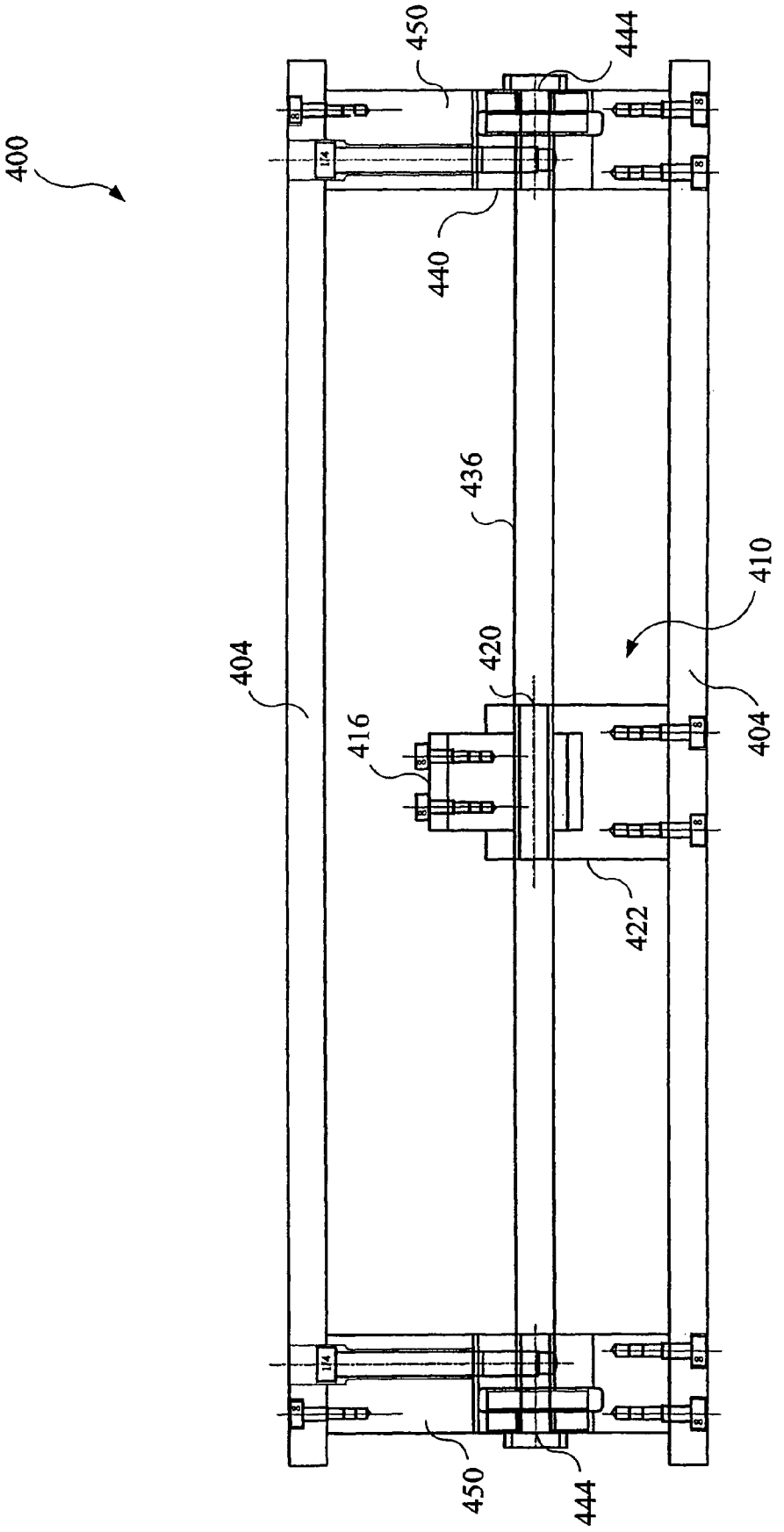


FIG. 10

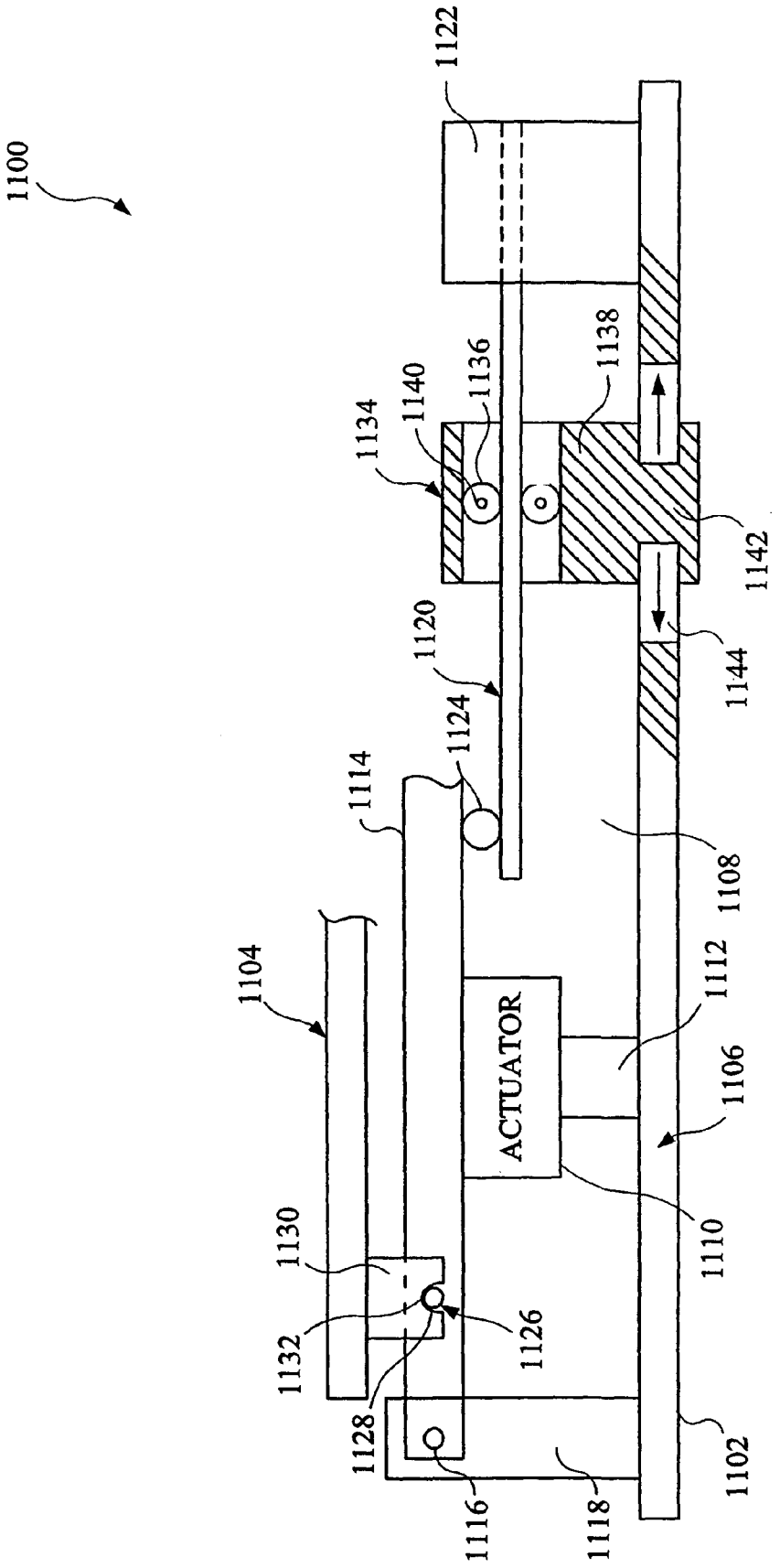
1100
1122
1138
1136
1140
1134
1142
1120
1124
1144
1114
1108
1104
1112
ACTUATOR
1106
1130
1110
1132
1126
1128
1102
1116
1118

FIG. 11

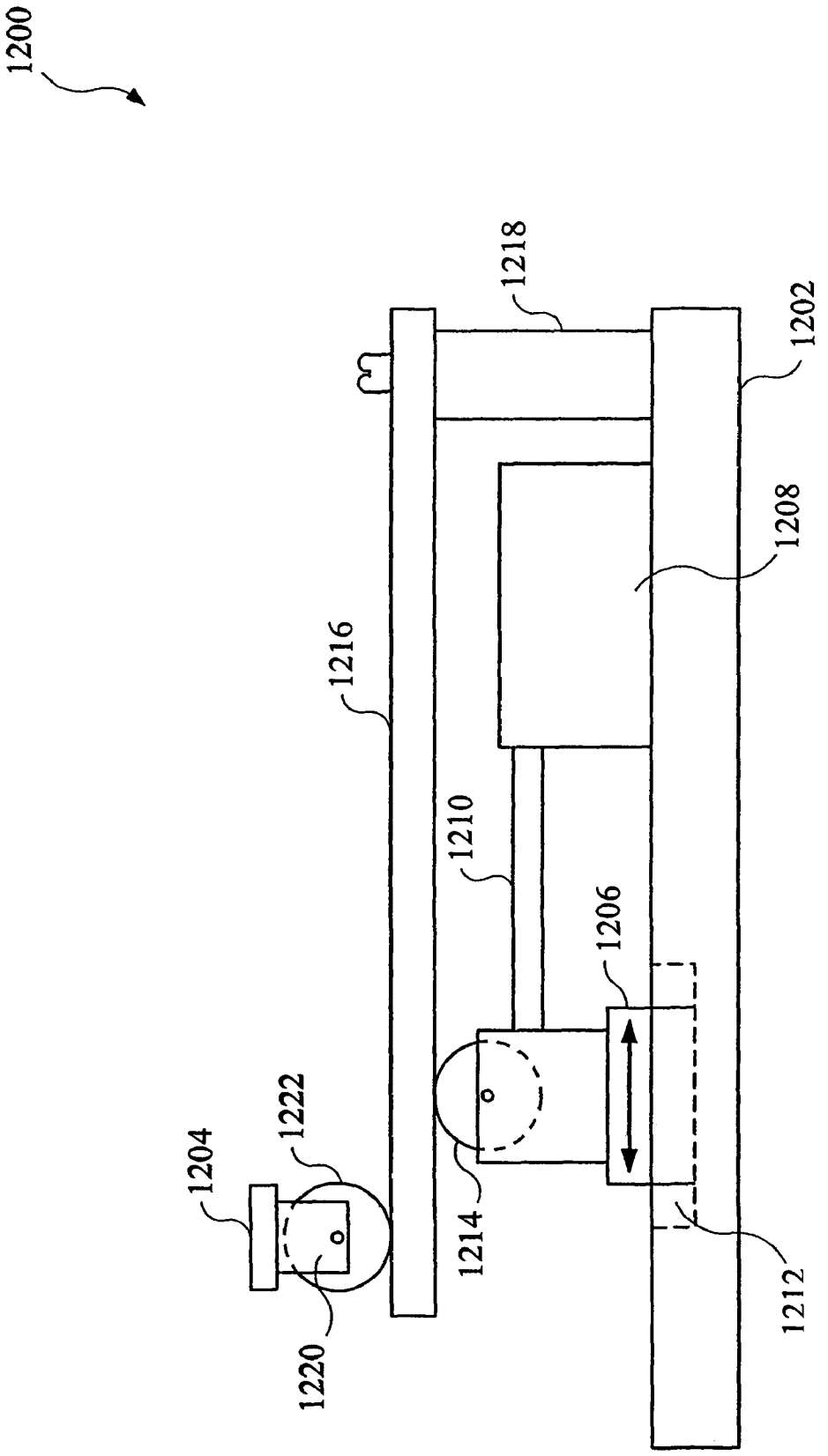


FIG. 12

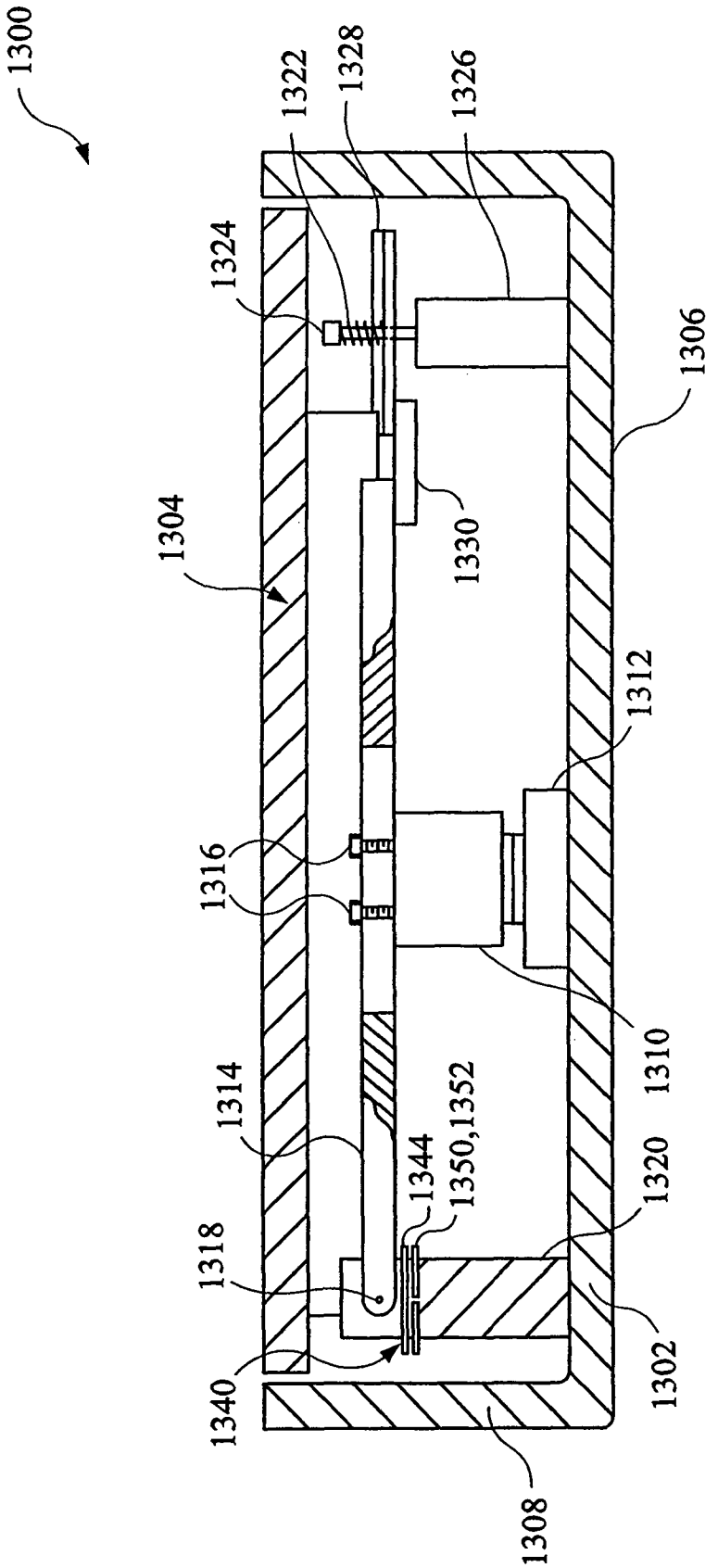
1300
1322
1328
1326
1324
1306
1304
1330
1312
1316
1310
1314
1350,1352
1344
1320
1318
1302
1340
1308

FIG. 13

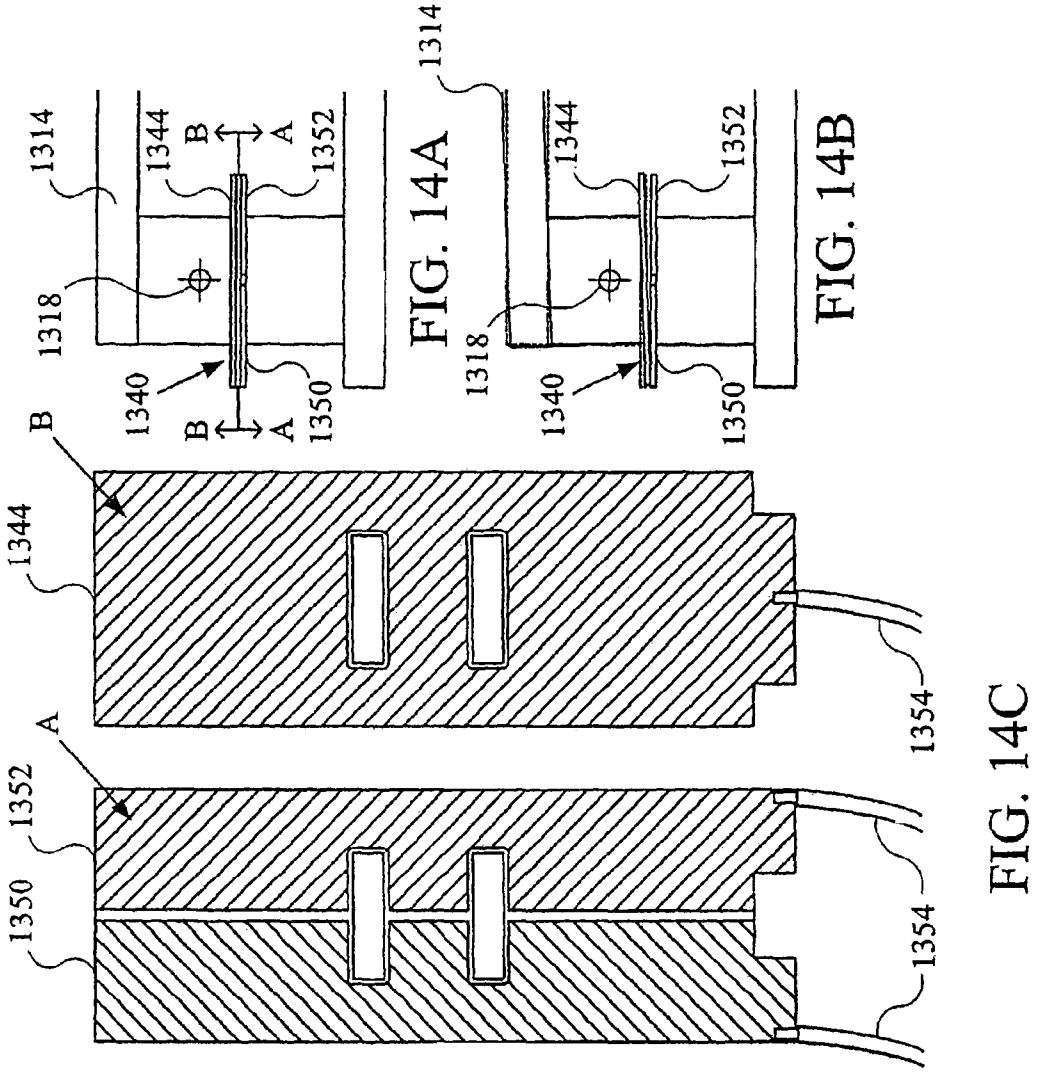


FIG. 14A

FIG. 14B

FIG. 14C

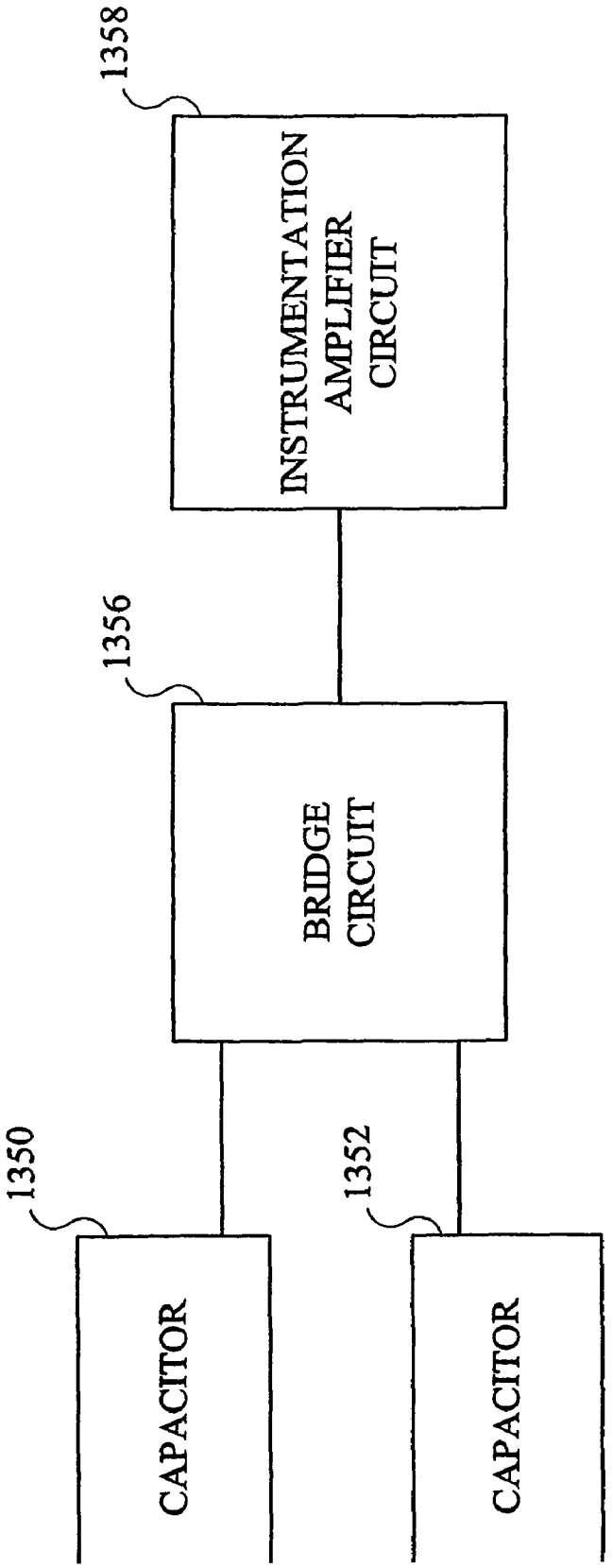
1358
INSTRUMENTATION AMPLIFIER CIRCUIT
1356
BRIDGE CIRCUIT
1350
CAPACITOR
1352
CAPACITOR

FIG. 15

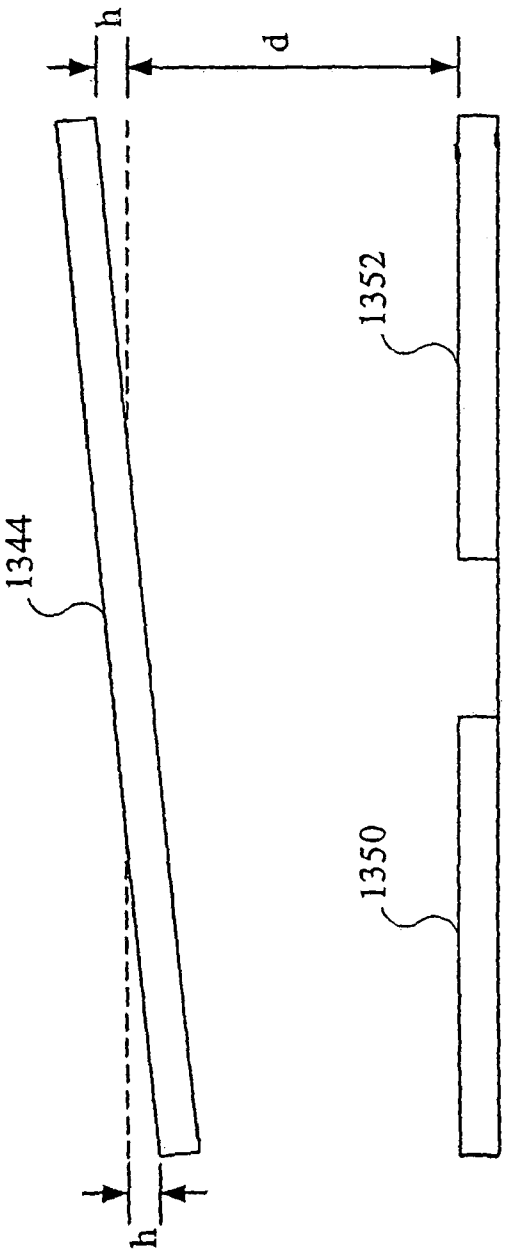


FIG. 16

# APPARATUS AND METHODS FOR THERAPEUTICALLY TREATING DAMAGED TISSUES, BONE FRACTURES, OSTEOPENIA, OR OSTEOPOROSIS

## CROSS-REFERENCE TO RELATED APPLICATION

This application is a continuation of U.S. patent application Ser. No. 11/034,302, which was filed on Jan. 10, 2005, now U.S. Pat. No. 7,207,954, which is a continuation of U.S. patent application Ser. No. 10/448,942, which was filed on May 30, 2003, now U.S. Pat. No. 6,843,776, which is a continuation-in-part of U.S. patent application Ser. No. 10/290,839 which was filed on Nov. 8, 2002, now U.S. Pat. No. 6,884,227.

## BACKGROUND OF THE INVENTION

1. Field of the Invention

The invention generally relates to the field of stimulating tissue growth and healing, and more particularly to apparatus and methods for therapeutically treating damaged tissues, bone fractures, osteopenia, osteoporosis, or other tissue conditions.

2. Description of the Related Art

When damaged, tissues in a human body such as connective tissues, ligaments, bones, etc. all require time to heal. Some tissues, such as a bone fracture in a human body, require relatively longer periods of time to heal. Typically, a fractured bone must be set and then the bone can be stabilized within a cast, splint or similar type of device. This type of treatment allows the natural healing process to begin. However, the healing process for a bone fracture in the human body may take several weeks and may vary depending upon the location of the bone fracture, the age of the patient, the overall general health of the patient, and other factors that are patient-dependent. Depending upon the location of the fracture, the area of the bone fracture or even the patient may have to be immobilized to encourage complete healing of the bone fracture. Immobilization of the patient and/or bone fracture may decrease the number of physical activities the patient is able to perform, which may have other adverse health consequences. Osteopenia, which is a loss of bone mass, can arise from a decrease in muscle activity, which may occur as the result of a bone fracture, bed rest, fracture immobilization, joint reconstruction, arthritis, and the like. However, this effect can be slowed, stopped, and even reversed by reproducing some of the effects of muscle use on the bone. This typically involves some application or simulation of the effects of mechanical stress on the bone.

Promoting bone growth is also important in treating bone fractures, and in the successful implantation of medical prostheses, such as those commonly known as "artificial" hips, knees, vertebral discs, and the like, where it is desired to promote bony ingrowth into the surface of the prosthesis to stabilize and secure it. Numerous different techniques have been developed to reduce the loss of bone mass. For example, it has been proposed to treat bone fractures by application of electrical voltage or current signals (e.g., U.S. Pat. No. 4,105,017; 4,266,532; 4,266,533, or 4,315,503). It has also been proposed to apply magnetic fields to stimulate healing of bone fractures (e.g., U.S. Pat. No. 3,890,953). Application of ultrasound to promoting tissue growth has also been disclosed (e.g., U.S. Pat. No. 4,530,360).

While many suggested techniques for applying or simulating mechanical loads on bone to promote growth involve the use of low frequency, high magnitude loads to the bone, this has been found to be unnecessary, and possibly also detrimental to bone maintenance. For instance, high impact loading, which is sometimes suggested to achieve a desired high peak strain, can result in fracture, defeating the purpose of the treatment.



It is also known in the art that low level, high frequency stress can be applied to bone, and that this will result in advantageous promotion of bone growth. One technique for achieving this type of stress is disclosed, e.g., in U.S. Pat. Nos. 5,103,806; 5,191,880; 5,273,028; 5,376,065; 5,997,490; and 6,234,975, the entire contents of each of which are incorporated herein by reference. In this technique, the patient is supported by a platform that can be actuated to oscillate vertically, so that the oscillation of the platform, together with acceleration brought about by the body weight of the patient, provides stress levels in a frequency range sufficient to prevent or reduce bone loss and enhance new bone formation. The peak-to-peak vertical displacement of the platform oscillation may be as little as 2 mm.

However, these systems and associated methods often depend on an arrangement whereby the operator or user must measure the weight of the patient and make adjustments to the frequency of oscillation to achieve the desired therapeutic effect. Thus, there remains a need in the art for an oscillating platform apparatus that automatically measures the weight of the patient and adjusts characteristics of the oscillation force as a function of the measured weight, to therapeutically treat damaged tissues, bone fractures, osteopenia, osteoporosis, or other tissue conditions.

## SUMMARY OF THE INVENTION

The invention described herein satisfies the needs described above. More particularly, apparatus and methods according to various embodiments of the invention are disclosed which measure the weight of the patient and adjust characteristics of an oscillation frequency such as, for example, the amplitude of the frequency for therapeutically treating damaged tissues, bone fractures, osteopenia, osteoporosis, or other tissue conditions. Furthermore, apparatus and methods according to another embodiment of the invention include the ability to turn the oscillator on and off as a function of whether a mass is detected on the platform apparatus. A platform according to the invention is also referred to as an "oscillating platform" or as a "mechanical stress platform."

One aspect of apparatus and methods according to various embodiments of the invention focuses on a platform for therapeutically treating bone fractures, osteopenia, osteoporosis, or other tissue conditions having the ability to automatically measure the mass of the body being supported by the platform. An oscillator is positioned within the platform and is configured to impart an oscillating force on the body. A capacitor assembly is positioned adjacent the platform for automatically determining the mass of the body being supported on the platform. Once the mass of the body is determined, the amplitude of a frequency of the oscillating force is adjusted to provide a desired therapeutic treatment to the patient. Also, the capacitor assembly is configured to turn the oscillator on and off as a function of whether or not a body is being supported on the platform.

Objects, features and advantages of various apparatus and methods according to various embodiments of the invention include:

(1) providing the ability to automatically determine the weight of a body and adjust the amplitude of the oscillation

frequency used to therapeutically treat damaged tissues, bone fractures, osteopenia, osteoporosis, or other tissue conditions in the body;

(2) providing the ability to therapeutically treat tissues in a body to reduce or prevent osteopenia or osteoporosis;

(3) providing the ability to therapeutically treat damaged tissues, bone fractures, osteopenia, osteoporosis, or other tissue conditions in a body at a frequency effective to promote tissue or bone healing, growth, and/or regeneration;

(4) providing an apparatus adapted to automatically therapeutically treat damaged tissues, bone fractures, osteopenia, osteoporosis, or other tissue conditions in a body; and

(5) providing the ability to turn an oscillator on and off based on the existence of a body on an oscillator platform apparatus.

## BRIEF DESCRIPTION OF THE DRAWINGS

The accompanying drawings, which are incorporated in and constitute a part of this specification, illustrate embodiments of the disclosure and, together with a general description of the disclosure given above, and the detailed description of the embodiments given below, serve to explain the principles of the disclosure.

FIG. **1** is a top plan view of an oscillating platform according to various embodiments of the invention, viewed through the top plate, and showing the internal mechanism of the platform.

FIG. **2** is a side sectional view taken along line **1-1** in FIG. **1**, and partially cut away to show details of the connection of the oscillating actuator to the drive lever.

FIG. **3** is an exploded perspective view of the oscillating platform shown in FIG. **1**, and partially cut away to show the internal mechanism of the platform.

FIG. **4** is a top plan view of another oscillating platform according to various embodiments of the invention, viewed through the top plate, and showing the internal mechanism of the platform.

FIG. **5** is a side sectional view along line A-A in FIG. **4**, showing the oscillating platform in an up-position.

FIG. **6** is a side sectional view along line A-A in FIG. **4**, showing the oscillating platform in a mid-position.

FIG. **7** is a side sectional view along line A-A in FIG. **4**, showing the oscillating platform in a down-position.

FIG. **8** is a side sectional view along line B-B in FIG. **4**.

FIG. **9** is a side sectional view along line A-A in FIG. **4**.

FIG. **10** is a rear section view along line C-C in FIG. **4**, showing the oscillating platform.

FIG. **11** is a side-sectional view of another oscillating platform according to various embodiments of the invention, showing the internal mechanism of the platform.

FIG. **12** is a side-sectional view of another oscillating platform according to various embodiments of the invention, showing the internal mechanism of the platform.

FIG. **13** is a side sectional view of another embodiment of an oscillating platform in accordance with the present invention.

FIG. **14**A is a side sectional view of the capacitor assembly in a static, resting position.

FIG. **14**B is a side sectional view of the capacitor assembly with the common plate of the capacitor assembly in a displaced position.

FIG. **14**C is a top plan view of the two capacitor plates and the common plate of the capacitor assembly.

FIG. **15** is a flow diagram illustrating the circuitry associated with the capacitor assembly in accordance with the present invention.

FIG. **16** is a side sectional view of the capacitor assembly in a displaced position.

## DETAILED DESCRIPTION OF PREFERRED EMBODIMENTS

Apparatus and methods in accordance with various embodiments of the invention are for therapeutically treating tissue damage, bone fractures, osteopenia, osteoporosis, or other tissue conditions. Furthermore, apparatus and methods in accordance with various embodiments of the invention provide an oscillating platform apparatus that is highly stable, and relatively insensitive to positioning of the patient on the platform, while providing low displacement, high frequency mechanical loading of bone tissue sufficient to promote healing and/or growth of tissue damage, bone tissue, or reduce, reverse, or prevent osteopenia and osteoporosis, and other tissue conditions.

FIGS. **1-3** illustrate an oscillating platform according to various embodiments of the invention. FIG. **1** shows a top plan view of the platform **100**, which is housed within a housing **102**. The platform **100** is also referred to as an oscillating platform or a mechanical stress platform. The housing **102** includes an upper plate **104** (best seen in FIGS. **2** and **3**), lower plate **106**, and side walls **108**. Note that the upper plate **104** is generally rectangular or square-shaped, but can otherwise be geometrically configured for supporting a body in an upright position on top of the upper plate **104**, or in a position otherwise relative to the platform **100**. Other configurations or structures can be also used to support a body in an upright position, above, or otherwise relative to, the platform. FIG. **1** shows the platform **100** through top plate **104**, so that the internal mechanism can be illustrated. Oscillating actuator **110** mounts to lower plate **106** by oscillator mounting plate **112** (see FIG. **2**), and connects to drive lever **114** by one or more connectors **116**.

Oscillating actuator **110** causes drive lever **114** to rotate a fixed distance around drive lever pivot point **118** on drive lever mounting block **120**. The oscillating actuator **110** actuates the drive lever at a first predetermined frequency. The motion of the drive lever **114** around the drive lever pivot point **118** is damped by a damping member such as a spring **122**, best seen in FIGS. **2** and **3**. The damping member or spring **122** creates an oscillation force to counteract the mass on platform and the voice coil **126**. The oscillation force of the spring **122** operates at a second predetermined frequency. The second predetermined frequency is preferably equal to the first predetermined frequency. One end of spring **122** is connected to spring mounting post **124**, which is supported by mounting block **126**, while the other end of spring **122** is connected to distributing lever support platform **128**. Distributing lever support platform **128** is connected to drive lever **114** by connecting plate **130**. Distributing lever support platform **128** supports primary distributing levers **132**, which rotate about primary distributing lever pivot points **134**, and which may be formed by the surface of the primary distributing lever **132** bearing against the end of a notch **136** in a support **138** extending from lower plate **106**. Secondary distributing levers **140** are connected to primary distributing levers **132** by linkages **142**, which may be simply mutually engaging slots. Secondary distributing levers **132** rotate about pivot points **144** in a manner similar to that described above for the primary distributing levers **132**.

Upper plate **104** is supported by a plurality of contact points **146**, which can be adjustably secured to the underside of the upper plate **104**, and which contact the upper surfaces

of primary distributing levers **132**, secondary distributing levers **140**, or some combination thereof.

In operation, a patient (not shown) sits or stands on the upper plate **104**, which is in turn supported by a combination of the primary distributing levers **132** and secondary distributing levers **140**. When the apparatus is operating, oscillating actuator **110** moves up and down in a reciprocal motion, causing drive lever **114** to oscillate about its pivot point **118** at a first predetermined frequency. The rigid connection between the drive lever **114** and distributing lever support platform **128** results in this oscillation being damped by the force created or exerted by the spring **122**, which can desirably be driven at a second predetermined frequency, in some embodiments its resonance frequency and/or harmonic or sub-harmonics of the resonance frequency. The oscillatory displacement is transmitted from the distributing lever support platform **128** to primary distributing levers **132** and thus to secondary distributing levers **140**. One or more of the primary distributing levers **132** and/or secondary distributing levers **140** distribute the motion imparted by the oscillation to the free-floating upper plate **104** by virtue of contact points **146**. The oscillatory displacement is then transmitted to the patient supported by the upper plate **104**, thereby imparting high frequency, low displacement mechanical loads to the patient's tissues, such as the bone structure of the patient supported by the platform **100**.

In this particular embodiment, the oscillating actuator **110** can be a piezoelectric or electromagnetic transducer configured to generate a vibration. Other conventional types of transducers may be suitable for use with the invention. For example, if small ranges of displacements are contemplated, e.g. approximately 0.002 inches (0.05 mm) or less, then a piezoelectric transducer, a motor with a cam, or a hydraulic-driven cylinder can be employed. Alternatively, if relatively larger ranges of displacements are contemplated, then an electromagnetic transducer can be employed.

Suitable electromagnetic transducers, such as a cylindrically configured moving coil high performance linear actuator may be obtained from BEI Motion Systems Company, Kimco Magnetic Division of San Marcos, Calif. Such an electromagnetic transducer may deliver a linear force, without hysteresis, for coil excitation in the range of 10-100 Hz, and short-stroke action in ranges as low as 0.8 inches (20 mm) or less.

Furthermore, the spring **122** can be a conventional type spring configured to resonate at a predetermined frequency as a function of the mass of the patient, or at the resonance frequency. The resonance frequency of the spring can be determined from the equation:

$$\text{Resonance Frequency (Hz)} = [\text{Spring Constant (k)} / \text{Mass (lbs)}]^{1/2}$$

For example, if the oscillating platform is to be designed for treatment of humans, the spring **122** can be sized to resonate at a frequency between approximately 30-36 Hz. If the oscillating platform is to be designed for the treatment of animals, the spring **122** can be sized to resonate at a frequency up to 120 Hz. An oscillating platform configured to oscillate at approximately 30-36 Hz utilizes a compression spring with a spring constant (k) of approximately 9 pounds (lbs.) per inch in the embodiment shown. In other configurations of an oscillating platform, oscillations of a similar range and frequency can be generated by one or more springs, or by other devices or mechanisms designed to create or otherwise dampen an oscillation force to a desired range or frequency.

FIG. **2** is a side sectional view taken along line **1-1** in FIG. **1**, and partially cut away to show details of the connection of the oscillating actuator **110** to the drive lever **114**. The drive lever **114** includes an elongate slot **148** (shown in FIGS. **1** and **3**) for receiving connectors **116**. The elongate slot **148** permits the oscillating actuator **110** to be selectively positioned along a portion of the length of the drive lever **114**. The connectors **116** can be manually adjusted to position the oscillating actuator **110** with respect to the drive lever **114**, and then readjusted when a desired position for the oscillating actuator **110** is selected along the length of the elongate slot **148**. By adjusting the position of the oscillating actuator **110**, the vertical movement or displacement of the drive lever **114** can be adjusted. For example, if the oscillating actuator **110** is positioned towards the drive lever pivot point **118**, then the vertical movement or displacement of the drive lever **114** at the opposing end near the spring **122** will be relatively greater than when the oscillating actuator **110** is positioned towards the spring. Conversely, as the oscillating actuator **110** is positioned towards the spring **122**, the vertical movement or displacement of the drive lever **114** at the opposing end near the spring **122** will be relatively less than when the oscillating actuator **110** is positioned towards the drive lever pivot point **118**.

FIG. **3** is an exploded perspective view of the oscillating platform **100** shown in FIG. **1**, and is partially cut away to show the internal mechanism of the platform **100**. In this embodiment as well as other embodiments, the invention is contained within a housing **102**. The housing **102** can be made from any material sufficiently strong for the purposes described herein, e.g. any material that can bear the weight of a patient on the upper plate. For example, suitable materials can be metals, e.g. steel, aluminum, iron, etc.; plastics, e.g. polycarbonates, polyvinylchloride, acrylics, polyolefins, etc.; or composites; or combinations of any of these materials.

Also shown in this embodiment is a series of holes **150** machined through the upper plate **104** of the platform **100**. The holes **150** are arranged parallel with each of the primary distributing levers **132** and secondary distributing levers **140**. These holes **150** (also shown in FIG. **1**) provide different points of connection or attachment for contact points **146**, thereby varying the points at which these contact points contact the distributing levers **132**, **140**, and thus the amount of lever arm and mechanical advantage used in driving the upper plate **104** to vibrate.

FIGS. **4-10** illustrate another oscillating platform according to various embodiments of the invention. FIG. **4** shows a top plan view of the platform **400**, which is housed within a housing **402**. The platform **400** is also referred to as an "oscillating platform" or a "mechanical stress platform." The housing **402** includes an upper plate **404** (best seen in FIGS. **5-9**), lower plate **406**, and side walls **408**. Note that the upper plate **404** is generally rectangular or square-shaped, but can otherwise be geometrically configured for supporting a body in an upright position on top of the upper plate **404**, or in a position otherwise relative to the platform. Other configurations or structures are also used to support a body in an upright position, above, or otherwise relative to the platform. FIG. **4** shows the platform **400** through upper plate **404**, so that the internal mechanism is illustrated. An oscillating actuator **410** mounts to lower plate **406**. The oscillating actuator **410** is an electromagnetic-type actuator that consists of a stationary coil **412** and armature **414**.

The oscillating actuator **410** is configured so that when the stationary coil **412** is energized, the armature **414** can be actuated relative to the stationary coil **412**. The stationary coil **412** mounts to the lower plate **406**, while the armature **414** connects to a drive lever **416** by one or more connectors **418**.

Oscillating actuator **410** causes drive lever **416** to rotate a fixed distance around drive lever pivot point **420** on drive lever mounting block **422**. The oscillating actuator actuates the drive lever **416** at a first predetermined frequency. The drive lever mounting block mounts to the lower plate **406**. The motion of the drive lever **416** around the drive lever pivot point **420** is damped by a damping member such as a spring **424**, best seen in FIGS. **5-8**. The damping member or spring **424** creates an oscillation force at a second predetermined frequency, such as its resonance frequency or a harmonic or sub-harmonic of the resonance frequency. The spring **424** fits around a damping member mounting post such as a spring mounting post **426** which extends between a damping member mounting block such as a spring mounting block **428** and the upper plate **404**. The spring mounting post **426** mounts to the lower plate **406**.

A hole **430** near one end of the drive lever **416** permits the spring mounting post **426** to extend upward from the spring mounting block **428**, through the drive lever **416**, and to the bottom side of the top plate **404**. One end of the spring **424** is connected to a spring mounting block **428** while the other end of the spring **424** is connected to a lever bearing surface **432** which mounts to the bottom side of the drive lever **416** and around the hole **430** through the drive lever **416**. Lever bearing surface **432** is connected to drive lever **416** by a threaded connector **434** that fits within the hole **430**. Thus the spring **424** extends between the bottom side of the drive lever **416** and the spring mounting block **428**.

A crossover bar **436** mounts to the bottom side of the drive lever **416** with connector **438**, and extends in a direction substantially perpendicular to the length of the drive lever **416**. At each end of the crossover bar **436**, side distributing levers **440** mount to the crossover bar **436** with connectors **442** at one end of each side distributing lever **440**. Each side distributing lever **440** then extends substantially perpendicular from the length of the crossover bar **436** and substantially parallel to a respective sidewall **408** of the platform **400**. Each side distributing lever **440** rotates about side distributing lever pivot points **444** located near the opposing ends of the side distributing levers **440**. A lift pin **446** adjacent to the side distributing lever pivot point **444** and extending substantially perpendicular from the side distributing lever arm **440** bears against the end of a notch **448** in a support **450** extending from upper plate **404**. Upper plate **404** is supported by a plurality of contact points **452** which result from the bearing contact between the upper surface of the lift pin **446** and a portion of the notch **448** in the support **450**.

A printed circuit board (PCB) **454** mounts to the lower plate **406** by connectors **456**. The PCB **454** provides control circuitry and associated executable commands or instructions for operating the oscillating actuator **410**. An access panel **458** in the upper plate **404** provides maintenance access to the internal mechanism of the platform **400**. In operation, a patient (not shown) sits or stands on the upper plate **404**, which is in turn supported by the lift pins **446**. When the apparatus is operating, oscillating actuator **410** moves up and down in a reciprocal motion, causing drive lever **416** to oscillate about its pivot point **420** at a first predetermined frequency. The rigid connection between the drive lever **416** and drive lever mounting block **422** results in this oscillation being damped by the force exerted by the spring **424**, which can be driven at a second predetermined frequency, in some embodiments its resonance frequency, or a harmonic or sub-harmonic of the resonance frequency. The damped oscillatory displacement is transmitted from the drive lever **416** to crossover bar **436** and thus to side distributing lever arms **440**. One or more of the side distributing lever arms **440** distribute the motion imparted by the oscillation to the free-floating upper plate **404** by virtue of the lift pins **446** and contact points **452**. The oscillatory displacement is then transmitted to the patient supported by the upper plate **404**, thereby imparting high frequency, low displacement mechanical loads to the patient's tissues, such as a bone structure of the patient supported by the platform **400**.

It is desired that a high frequency, low displacement mechanical load be imparted to the bone structure of the patient supported by the platform. To achieve this load, in some embodiments the horizontal centerline distance between the damping member or spring **424** and the drive lever pivot point **420** is approximately 12 inches (304.8 mm); and the horizontal centerline distance between the oscillating actuator **410** and the drive lever pivot point **420** is approximately 3 inches (76.2 mm). The ratio of the distance from the damping member or spring **424** to the drive lever pivot point **420**, and from the oscillating actuator **410** to the drive lever pivot point **420** may be about 4 to 1, and is also called the drive ratio. Furthermore, in this embodiment, the horizontal centerline distance between the side distributing lever pivot point **444** near the drive lever pivot point **420** and the side distributing lever pivot point **444** near the damping member or spring **424** should be approximately 12 inches (304.8 mm); and the horizontal centerline distance between each side distributing lever pivot point **444** and the respective lift pin may be approximately ¾ inch (19 mm). The ratio of the distance from the side distributing lever pivot point **444** near the drive lever pivot point **420** to the side distributing lever pivot point **444** near the spring **424**, and from each side distributing lever pivot point **444** and the respective lift pin is about 16 to 1 in some embodiments, and is also called the lifting ratio. In the configuration shown and described, the oscillating platform **400** provides a specific drive ratio and lifting ratio. Other combinations of drive ratios and lifting ratios may be used with varying results in accordance with various embodiments of the invention.

Moreover, in this particular embodiment, the oscillating actuator **410** is an electromagnetic-type actuator configured to actuate or generate a vibration, such as a combination coil and armature or a solenoid. Other conventional types of actuators may be suitable for use with the invention. In the configuration shown and described, the oscillating actuator may be configured to actuate at approximately 30-36 Hz. Furthermore, the damping member or spring **424** can be a conventional coil spring configured to resonate in a range of predetermined frequencies. For example, if the oscillating platform is to be designed for treatment of humans, the damping member or spring is sized to resonate at a frequency between approximately 30 and 36 Hz. If the oscillating platform is to be designed for the treatment of vertebrae animals, the damping member or spring is sized to resonate at a frequency range between approximately 30 Hz and 120 Hz. In the configuration shown, the damping member or spring is a compression spring with a spring constant of approximately 9 pounds (lbs.) per inch. In other configurations of an oscillating platform, oscillations of a similar range and frequency can be generated by one or more damping members or springs, or by other devices or mechanisms designed to create or otherwise dampen an oscillation force to a desired range or frequency.

FIGS. **5-7** illustrate the platform **400** of FIG. **4** in operation. FIG. **5** is a side sectional view along line A-A in FIG. **4**, showing the platform **400** in an up-position. FIG. **6** is a side sectional view along line A-A in FIG. **4**, showing the platform **400** in a mid-position. FIG. **7** is a side sectional view along line A-A in FIG. **4**, showing the platform **400** in a down-

position. In FIGS. **5-7**, the internal mechanism of the platform **400** is shown in operation with respect to a load (not shown) placed on the upper plate **404**. These views illustrate the relative positions of the drive lever **416**, side distribution lever arms **440**, and the spring **424** while various loads are placed on the upper plate **404**.

As shown in FIGS. **5-7**, when a specific load is placed on the upper plate **404**, the side distributing lever arms **440** respond to the respective load on the upper plate **404**. In all instances, the load creates a downward force on the upper plate **404** that is transferred from the supports **450** to a respective lift pin **446** and further transferred to the side distributing lever arms **440**, the crossover bar **436**, and then to the drive lever **416** and spring **424**. For example, in FIG. **5**, when a load weighing approximately fifty pounds (22.5 kilograms) is placed on the upper plate **404**, a side distributing lever arm **440** nearest to and adjacent to the drive lever pivot point **420** is displaced upward towards the crossover bar **436**, whereas the side distributing lever arm **440** nearest to and adjacent to the spring **424** is displaced downward from the crossover bar **436**. The drive lever **416** is displaced generally upward from the drive lever pivot point **420** with the spring **424** in a relatively extended position.

In FIG. **6**, when a load weighing approximately 140 pounds (63 kilograms) is placed on the upper plate **404**, the side distributing lever arm **440** nearest to and adjacent to the drive lever pivot point **420** is displaced to a substantially parallel orientation with the front side distributing lever arm **440** nearest to and adjacent to the spring **424**. The drive lever **416** is displaced generally horizontal from the drive lever pivot point **420** with the spring **424** in a relatively compressed position compared to FIG. **5**.

Finally, in FIG. **7**, when a relatively large load of approximately 300 pounds (135 kilograms) is placed on the upper plate **404**, the side distributing lever arm **440** nearest to and adjacent to the drive lever pivot point **420** is displaced downward towards the crossover bar **436**, whereas the side distributing lever arm **440** nearest to and adjacent to the spring **424** is displaced upward from the crossover bar **436**. The drive lever **416** is displaced generally downward from the drive lever pivot point **420** with the spring **424** in a relatively compressed position compared to FIGS. **5** and **6**.

FIG. **8** is a side sectional view of the platform **400** along line B-B in FIG. **4**. This view illustrates the platform **400** in a no-load position, and details the relative positions of the upper plate **404**, side distribution lever arms **440**, and crossover bar **436** in a no-load position.

FIG. **9** is a side sectional view of the platform **400** along line A-A in FIG. **4**. This view further illustrates the platform **400** in a no-load position, and details the relative positions of the drive lever **416**, crossover bar **436**, spring **424**, and oscillating actuator **410** in a no load position.

FIG. **10** is a rear section view of the platform **400** along line C-C in FIG. **4**, showing the platform **400** in a no-load position, and details the relative positions of the drive lever **416**, oscillating actuator **410**, crossover bar **436**, side distribution lever arms **440**, and upper plate **404**.

FIG. **11** illustrates another oscillating platform **1100** according to various embodiments of the invention. A cross-sectional view of the internal mechanism of an oscillating platform **1100** is illustrated in FIG. **11**. This embodiment is shown with a housing **1102** including an upper plate **1104**, lower plate **1106**, and side walls **1108**. Note that the upper plate **1104** is generally rectangular or square-shaped, but can otherwise be geometrically configured for supporting a body in an upright position on top of the upper plate **1104**, or in a position otherwise relative to the platform. Other configurations or structures can be also used to support a body in an upright position, above, or otherwise relative to the platform. Oscillating actuator **1110** mounts to lower plate **1106** by oscillator mounting plate **1112**, and connects to drive lever **1114** by one or more connectors (not shown).

Oscillating actuator **1110** causes drive lever **1114** to rotate a fixed distance at a first predetermined frequency around drive lever pivot point **1116** on drive lever mounting block **1118**. The motion of the drive lever **1114** around the drive lever pivot point **1116** is damped by a damping member such as a cantilever spring **1120**. The cantilever spring **1120** then creates an oscillation force at a second predetermined frequency, such as its resonance frequency or a harmonic or sub-harmonic of the resonance frequency. One end of the cantilever spring **1120** mounts to a spring mounting block **1122**, while the other end of cantilever spring **1120** is in contact with the drive lever **1114** or spring contact point **1124**. The spring contact point **1124** may be an extension piece mounted to the underside of the drive lever **1114** and configured for contact with the cantilever spring **1120**.

One or more lift pins **1126** extend from a lateral side of the drive lever **1114**. The lift pins **1126** engage a respective notch **1128** in one or more corresponding supports **1130** mounted to the underside of the upper plate **1104**. The free-floating upper plate **1104** is supported by one or more contact points **1132** between the lift pins **1126** and the supports **1130**.

The second predetermined frequency, such as the resonance frequency or a harmonic or sub-harmonic of the resonance frequency, of the cantilever spring **1120** can be adjusted by a node point **1134**. The node point **1134** consists of a dual set of rollers **1136**, a roller mounting block **1138**, connectors **1140** and an external knob **1142**. The cantilever spring **1120** mounts between the dual set of rollers **1136** so that the rollers **1136** can be positioned along the length of the cantilever spring **1120**. The dual set of rollers **1136** mount to the roller mounting block **1138** via connectors **1140**.

The position of the roller mounting block **1138** can be adjusted along the length of the cantilever spring **1120** by an external knob **1142** that slides along a track **1144** parallel with the length of the cantilever spring **1120**.

The position of the node point **1134** can be manually or automatically adjusted, or otherwise pre-set along the length of the cantilever spring **1120**. When the node point **1134** is adjusted to a specific position along the cantilever spring **1120**, the node point **1120** acts as a fixed point or fulcrum for the cantilever spring **1120** so that a resonant length of the cantilever spring **1120** can be set to a specific amount. Note that the resonant length of the cantilever spring **1120** depends upon the mass of the load placed on the upper plate **1104** and the mass of the combined drive lever **1114** and cantilever spring **1120**. The end of the cantilever spring **1120** in contact with the drive lever **1114** or spring contact point **1124** can then resonate when the oscillating actuator **1110** is activated. For example, with a fixed mass placed on the upper plate **1104**, as the node point **1134** is positioned towards the drive lever **1114** or spring contact point **1124**, the resonant length of the cantilever spring **1120** becomes relatively lesser.

Alternatively, as the node point **1134** is positioned towards the spring mounting block **1122**, the resonant length of the cantilever spring **1120** becomes relatively greater. FIG. **12** is a side-sectional view of another oscillating platform **1200** according to various embodiments of the invention, showing the internal mechanism of the platform. The view of this embodiment details another configuration of the internal mechanism of the oscillating platform **1200** with a cantilever

spring with a sliding node. Other configurations or structures can be also used to perform the disclosed functions of the oscillating platform.

Generally, a housing (not shown) houses the internal mechanism. The housing includes a lower plate **1202** or base. An upper plate (not shown) for supporting a body or a mass opposes the lower plate **1202**. An oscillating actuator (not shown), such as those disclosed in previous embodiments, mounts to lower plate **1202**, and contacts the drive lever **1204** in a manner similar to that shown in FIG. **11**. Generally, the drive lever **1204** is positioned adjacent to the upper plate to transfer oscillation movement from the drive lever to the upper plate and then to a body supported by or in contact with the upper plate.

A node mounting block **1206** and an associated servo stepper motor **1208** mount to the lower plate **1202**. The node mounting block **1206** and servo stepper motor **1208** connect to each other via a connector **1210**. When adjusted, the node mounting block **1206** can move with respect to the lower plate **1202** via a slot **1212** machined in the lower plate **1202**. The node mounting block **1206** includes a first roller **1214** mounted to and extending from the upper portion of the node mounting block **1206**.

A damping member, such as a cantilever spring **1216**, mounts to the lower plate **1202** with a fixed mounting **1218**. The cantilever spring **1216** extends from the fixed mounting **1218** towards the proximity of the node mounting block **1206**. The first roller **1214** mounted to the node mounting block **1206** contacts a lower portion of the extended cantilever spring **1216**. As the node mounting block **1206** is moved within the slot **1212**, the first roller **1214** moves with respect to the cantilever spring **1216**. Similar to the configuration shown in FIG. **11**, this type of configuration is called a "sliding node." A sliding node-type configuration causes the damping member such as a cantilever spring **1216** to change its frequency response as the node mounting block **1206** changes its position with respect to the damping member such as the cantilever spring **1216**.

As described above, the drive lever **1204** mounts to or contacts the lower portion of the upper plate. A roller mount **1220** extends from the lower portion of the drive lever **1204** towards the cantilever spring **1216**. A second roller **1222** mounts to the roller mount **1220**, and contacts an upper portion of the extended cantilever spring **1216**.

In this configuration, the oscillating actuator (not shown) causes drive lever **1204** to rotate a fixed distance at a first predetermined frequency around a drive lever pivot point (not shown). The motion of the drive lever **1204** around the drive lever pivot point is damped by a damping member such as the cantilever spring **1216**. The cantilever spring **1216** then creates an oscillation force at a second predetermined frequency, such as its resonance frequency or a harmonic or sub-harmonic of the resonance frequency.

The second predetermined frequency, such as the resonance frequency or a harmonic or sub-harmonic of the resonance frequency, of the cantilever spring **1216** can be adjusted as the position of the node mounting block **1206** is changed with respect to the cantilever spring, i.e. sliding node configuration. The position of the node mounting block **1206** can be manually or automatically adjusted, or otherwise pre-set along the length of the damped member or cantilever spring **1216**. Note that the resonant length of the damped member such as the cantilever spring **1216** depends upon the mass of the load placed on the upper plate and the mass of the combined drive lever **1204** and cantilever spring **1216**. The end of the cantilever spring **1216** in contact with the drive lever **1204** or a spring contact point can then resonate when the oscillating actuator is activated.

In the embodiments of an oscillating platform shown in FIGS. **11** and **12**, and in other structures in accordance with various embodiments of the invention, the platform may be configured to allow different users to selectively adjust the platform to compensate for different weights of each user. For example, in a physical rehabilitation environment, patients or users having different weights may want to utilize the same oscillating platform. Each patient or user could set-up the oscillating platform for an anticipated user weight on the upper plate so that the oscillating platform can apply an oscillation force of a desired resonance frequency or harmonic or sub-harmonic of the resonance frequency to the user when he or she sits or stands on the upper plate. An external knob may be provided on the oscillating platform to permit the user to selectively adjust the oscillating platform in accordance with the user's weight.

In some embodiments such as those shown in FIGS. **11** and **12**, the external knob controls the position of the sliding node, effectively changing the resonant length of the damped member such as a cantilever spring. In other embodiments, the external knob would control the position of the oscillating actuator relative to the drive lever. This type of configuration would allow the user to adjust the "effective length" of the drive lever and increase or decrease the vertical displacement of the drive lever as needed. The "effective length" of the drive lever is the distance from the centerline of the oscillating actuator to the end of the drive lever nearest the damping member or spring. For example, a user may increase the "effective length" of the drive lever by positioning the oscillating actuator towards the drive lever pivot point so that the corresponding vertical displacement of the drive lever can be increased. Conversely, a user may decrease the "effective length" of the drive lever by positioning the oscillating actuator towards the damping member or spring so that the corresponding vertical displacement of the drive lever can be decreased.

Thus, by positioning the oscillating actuator to a predetermined position in accordance with the weight of the user, or by positioning the sliding node in accordance with the weight of the user, the oscillating platform can provide a therapeutic vibration within a specific resonance frequency, or harmonic or sub-harmonic of the resonance frequency, range that is optimal for stimulating tissue or bone growth for different users having a range of different weights.

In other embodiments of the invention, the oscillating actuator may be configured for a single position. For example, in a home environment, a single patient only may utilize the oscillating platform. To reduce the amount of time necessary to set-up and operate the oscillating platform, the oscillating actuator may have a pre-set position in accordance with the particular patient's weight. The patient can then utilize the oscillating platform without need for adjusting the position of the oscillating actuator.

Finally, the embodiments disclosed above can also be adapted with a "self-tuning" feature. For example, when a user steps onto an oscillating platform with a self-tuning feature, the user's mass may be first determined. Based upon the mass of the user, the oscillating platform automatically adjusts the various components of the oscillating platform so that the oscillating platform can apply an oscillation force of a desired resonance frequency or harmonic or sub-harmonic of the resonance frequency to the user when he or she sits or stands or is otherwise supported by the oscillating platform. In this manner, the oscillating platform can provide a thera-

peutic treatment in accordance with the various embodiments of the invention, without need for manually adjusting the oscillating platform according to the user's mass, and reducing the possibility of user error in adjusting or manually tuning the oscillating platform for the desired treatment frequency.

An embodiment of platform **1300** which discloses this "self-tuning" feature in accordance with the present invention is illustrated in a side sectional view in FIG. **13**. Platform **1300** is also referred to as an oscillating platform or a mechanical stress platform, and is positioned within a housing **1302**. The housing **1302** includes an upper plate **1304**, lower plate **1306**, and side walls **1308**. The upper plate **1304** is generally rectangular or square-shaped, but can otherwise be geometrically configured for supporting a body in an upright position on top of the upper plate **1304**, or in a position otherwise relative to the platform **1300**. Other configurations or structures can also be used to support a body in an upright position, above, or otherwise relative to the platform.

An oscillating actuator **1310** mounts to lower plate **1306** by oscillator mounting plate **1312**, and connects to a drive lever **1314** by one or more connectors **1316**. FIG. **13** is partially cut away to show details of the connection of oscillating actuator **1310** to drive lever **1314**. At rest, the drive lever **1314** is supported in static equilibrium at a first end thereof by a damping member or spring **1322**. Drive lever **1314** is activated by oscillating actuator **1310** which causes drive lever **1314** to pivot a fixed distance around a drive lever pivot point **1318**. Drive lever pivot point **1318** is mounted on a drive lever mounting block **1320**. Oscillating actuator **1310** may be, for example, a voice coil.

The oscillating actuator **1310** actuates the drive lever **1314** at a first predetermined frequency. Preferably the drive lever **1314** is oscillated at a frequency of about 30 Hz. The frequency is typically within the range of 25-40 Hz. Platform **1300** is preferably part of a harmonically excited system. Accordingly, the first predetermined frequency is preferably equal to, or equivalent to, the resonant frequency, thus requiring minimum energy input. The resonant frequency is a function of the characteristics of the mass of the person and spring **1322**.

The motion of drive lever **1314** around the drive lever pivot point **1318** is damped by spring **1322**. Spring **1322** creates an oscillation force at a second predetermined frequency. One end of spring **1322** is connected to spring mounting post **1324**, which is supported by mounting block **1326**, while the other end of spring **1322** is connected to distributing lever support platform **1328**. Distributing lever support platform **1328** is connected to drive lever **1314** by connecting plate **1330**.

The drive lever **1314** includes an elongate slot **148** (shown in FIGS. **1** and **3**) for receiving connectors **1316**. The elongate slot **148** permits the oscillating actuator **1310** to be selectively positioned along a portion of the length of the drive lever **1314**. The connectors **1316** can be manually adjusted to position the oscillating actuator with respect to the drive lever **1314**, and then readjusted when a desired position for the oscillating actuator **1310** is selected along the length of the elongate slot **148**. By adjusting the position of the oscillating actuator **1310**, the vertical movement or displacement of the drive lever **1314** can be adjusted. For example, if the oscillating actuator **1310** is positioned towards the drive lever pivot point **1318**, then the vertical movement or displacement of the drive lever **1314** at the opposing end near the spring **1322** will be relatively greater than when the oscillating actuator **1310** is positioned towards the spring. Conversely, as the oscillating actuator **1310** is positioned towards the spring **1322**, the vertical movement or displacement of the drive lever **1314** at the end near the spring **1322** will be relatively less than when the oscillating actuator **1310** is positioned towards the drive lever pivot point **1318**.

In accordance with the present invention, a capacitor assembly **1340** comprising a pair of capacitors **1350**, **1352** and a common plate **1344** is positioned adjacent to a second end of drive lever **1314**. The capacitor assembly **1340** is configured to generate and transmit an electronic signal which is representative of a distance between at least one of the capacitors **1350** and **1352**, and common plate **1344**.

The capacitor assembly **1340** is shown in further detail with reference to FIGS. **14**A-C. Referring initially to FIG. **14**A, capacitor assembly **1340** is illustrated in a static, resting position with common plate **1344** being spaced apart and substantially parallel to capacitors **1350**, **1352**. Thus, a gap formed between common plate **1344** and capacitors **1350** and **1352** is substantially equidistant. As will be described in further detail below, a signal is produced by capacitor assembly **1340** which is representative of the distance between each of the capacitors **1350**, **1352** and the common plate **1344**. Thus, the signal produced by capacitor assembly **1340** in FIG. **14**A represents a baseline or null signal wherein no external forces are being applied to upper plate **1304** (not shown).

Referring now to FIG. **14**B, a force applied to upper plate **1304** (not shown) causes displacement of the drive lever **1314**, as indicated by the dashed lines. The force may be, for example, the weight of a person standing on the upper plate. As described above, drive lever **1314** is configured to pivot about pivot pin **1318**. As shown by the dashed lines in FIG. **14**B, the displacement of drive lever **1314** causes a similar displacement in common plate **1344** which is configured to pivot about a longitudinal axis thereof. Accordingly, the distance between common plate **1344** and capacitor **1352** increases while the distance between common plate **1344** and capacitor **1350** decreases. The differences in the distance measurements translate into a variation of the signal produced by each of the two capacitors. The signal will be processed by associated circuitry as will be described below with reference to FIG. **15**. For a static displacement of the components of capacitor assembly **1340**, as illustrated in FIGS. **14** A and **14**B, the signal generated by capacitor assembly **1340** is processed to determine the mass of the person standing on upper plate **1304**.

FIG. **14**C illustrates a plan view of common plate **1344** and capacitors **1350** and **1352**. Geometrically, capacitors **1350** and **1352** are illustrated in the shape of rectangles. It is contemplated that the capacitors may be formed in the shape of circles, squares, or any other suitable geometry. Each of these components are illustrated having a wire **1354** connected thereto. Wire **1354** represents a connection to related circuitry for processing the signal from capacitor assembly **1340**. As shown, capacitors **1350** and **1352** are divided by a longitudinal slot.

FIG. **15** is a flow diagram illustrating the circuitry associated with the capacitor assembly in accordance with the present invention. A signal from each of the capacitors **1350** and **1352** provides a signal to a bridge circuit **1356** and an instrumentation amplifier circuit **1358**. Bridge circuit **1356** is an alternating current (AC) bridge circuit.

The embodiment of the present invention described above with reference to FIGS. **14**A&B provided a description of the drive lever **1314** in a static position. Alternatively, it is contemplated that drive lever **1314** may be in a dynamic state. That is, drive lever **1314** may be moving up and down at a particular frequency, such as, for example, 30 Hz. A variation in the distance between capacitors **1350**, **1352** and common

plate **1340** varies a signal which is generated and transmitted by the capacitor assembly and transmitted to bridge circuit **1356**. The signal, when amplified by instrumentation amplifier circuit **1358**, translates into an electronic signal, such as, for example, a signal which produces a sine wave curve. The frequency of the signal is preferably equal to the vibration frequency of the platform. Additionally, the root mean square (RMS) value of the signal is proportional with the acceleration of the vibrating drive lever **1314**. Once each of the variables is calculated, the resulting values may be utilized to adjust the output of the oscillating actuator to vary the frequency of the vibration and thus the therapeutic affect to the patient. Additionally, the values may be utilized to turn the oscillating actuator on and off. That is, when the mass on the platform is equal to zero, the oscillating actuator is set to an off state. When a change in the mass on the platform is detected, the state of the oscillating actuator changes from off to on.

As described above, the measurement of the displacement of the components of the capacitor assembly **1340**, whether static or dynamic, may be utilized to automatically calculate parameters such as the weight of the person or object standing on the platform and the velocity and/or acceleration at which the platform vibrates to provide therapy to the intended recipient. FIG. **16** illustrates capacitor assembly **1340** in a displaced position. Capacitor assembly **1340** is labeled with the variables which coincide with the variables used in the following equations. The equations are utilized to calculate the parameters such as the weight of the person or object standing on the platform and the velocity and/or acceleration at which the platform vibrates.

$$x = \frac{h}{d}$$

$$C = \frac{C_0 S}{d}$$

$$C_1 = \frac{C_0 d}{h} \ln\left(1 + \frac{h}{d}\right)$$

$$C_2 = \frac{C_0 d}{h} \ln \frac{1}{1 - \frac{h}{d}}$$

by substituting h/d with x, the above equations are as follows:

$$C_1 = C_0 \frac{1}{x} \ln(1 + x)$$

$$C_2 = C_0 \frac{1}{x} \ln \frac{1}{1 - x}$$

$$\text{Thus, } C_1 - C_2 = C_0 \frac{1}{x} \ln(1 - x^2)$$

Now, assuming an AC bridge circuit with $C_1$ and $C_2$ with $V_1$ and $V_2$, wherein

$$Xc_1 = \frac{1}{j\omega C_1}$$

$$V_1 - V_2 = \frac{R(Xc_2 - Xc_1)}{(Xc_1 + R)(Xc_2 + R)} V_{\sim}$$

now substituting $Xc_1 >> R$ and $Xc_2 >> R$ the following equations fall out.

$$V_1 - V_2 = \frac{\frac{R}{j\omega} \frac{C_1 - C_2}{C_1 C_2}}{\frac{-1}{Co^2 C_1 C_2}} V_{\sim}$$

$$= \frac{1}{j} V_{\sim} \omega C_o R (C_1 - C_2)$$

$$= -\frac{1}{j} V_{\sim} \omega R C_o \frac{1}{x} \ln(1 - x^2)$$

therefore, if

$$\frac{h}{d} = x = \text{small (i.e., } x \ll 1),$$

then $\ln(1-x^2) \cong -x^2$

accordingly, by making the above substitutions,

$$V_1 - V_2 = \frac{1}{j} \omega R C_o x V_{\sim}$$

Thus, for static displacements, i.e., where x=constant, $V_1$-$V_2$ is proportional to the weight of the person standing on the platform. For dynamic displacements, i.e., where x=A sin wt, $V_1$-$V_2$ is proportional to the velocity or acceleration of the oscillation. For a "weight-on sensor", i.e., where a weight is detected on the platform, a voltage threshold may be implemented utilizing software, as is known to one having ordinary skill in the art.

While the above description contains many specifics, these specifics should not be construed as limitations on the scope of the invention, but merely as exemplifications of the disclosed embodiments. Those skilled in the art will envision many other possible variations that are within the scope of the invention as defined by the claims appended hereto.

What is claimed is:

**1**. A method for treating a patient, the method comprising the steps of:

supporting at least a portion of the patient on a platform;

oscillating the platform with at least one frequency; and

determining a mass of the portion of the patient being supported by the platform using a capacitor assembly, the capacitor assembly being disposed in mechanical cooperation with the platform.

**2**. The method of claim **1**, further comprising the step of adjusting an amplitude of the at least one frequency to achieve a desired treatment.

**3**. The method of claim **1**, further comprising the step of adjusting an amplitude of the at least one frequency as a function of the mass of the portion of the patient being supported by the platform.

**4**. The method of claim **1**, further comprising the step of setting the at least one frequency to zero when the capacitor assembly determines that the mass of the portion of the patient being supported by the platform is substantially equal to zero.

**5**. The method of claim **4**, further comprising the step of setting the at least one frequency at a desired level when the capacitor assembly determines that the mass of the portion of the patient being supported on the platform changes from substantially zero to a value which is greater than zero.

**6**. The method of claim **1**, wherein the at least one frequency is between about 30 Hz and about 36 Hz.

7. The method of claim 1, wherein the capacitor assembly is positioned adjacent the platform, and wherein movement of the platform causes a corresponding movement of components of the capacitor assembly.

8. The method of claim 1, wherein the capacitor assembly includes a common plate spaced apart from a pair of capacitor plates.

9. The method of claim 1, further comprising the steps of generating and transmitting a signal representative of the mass of the portion of the patient being supported by the platform, wherein the signal is generated and transmitted by the capacitor assembly.

10. The method of claim 9, wherein the capacitor assembly includes a common plate spaced apart from a pair of capacitor plates, and wherein a magnitude of the signal is a function of a displacement of the common plate with respect to the pair of capacitor plates.

11. The method of claim 1, wherein the capacitor assembly includes a differential capacitor assembly.

12. An apparatus for treating a portion of a body, the apparatus comprising:

a housing;

a platform configured to support at least a portion of the body, the platform being disposed in mechanical cooperation with the housing, and the platform being movable with respect to the housing;

a capacitor assembly positioned in mechanical cooperation with the platform, the capacitor assembly configured to determine a mass of the portion of the body being supported by the platform; and

an oscillator disposed in mechanical cooperation with the platform, the oscillator being configured to impart an oscillating force with at least one frequency on the platform.

13. The apparatus of claim 12, wherein the oscillator is configured to adjust an amplitude of the at least one frequency of the oscillating force to achieve a desired treatment.

14. The apparatus of claim 12, wherein the oscillator is configured to adjust an amplitude of the frequency of the oscillating force as a function of the mass of the portion of the body being supported by the platform as determined by the capacitor assembly.

15. The apparatus of claim 12, wherein the oscillator is configured such that the at least one frequency of the oscillating force is set to zero when the capacitor assembly determines that the mass of the portion of the body being supported by the platform is substantially equal to zero.

16. The apparatus of claim 15, wherein the oscillator is further configured such that the at least one frequency of the oscillating force is set to a desired level when the capacitor assembly determines that the magnitude of the mass of the portion of the body being supported by the platform changes from zero to a magnitude which is greater than zero.

17. The apparatus of claim 12, wherein the platform includes an upper plate and a lower plate, a drive lever supported from the lower plate, wherein the oscillating force of the oscillator is imparted on the body by oscillating the drive lever with respect to the upper plate and lower plate at a first predetermined frequency.

* * * * *